POWERMAT

GLOBAL COMMITMENT

CATALOGUE

2015

The Range

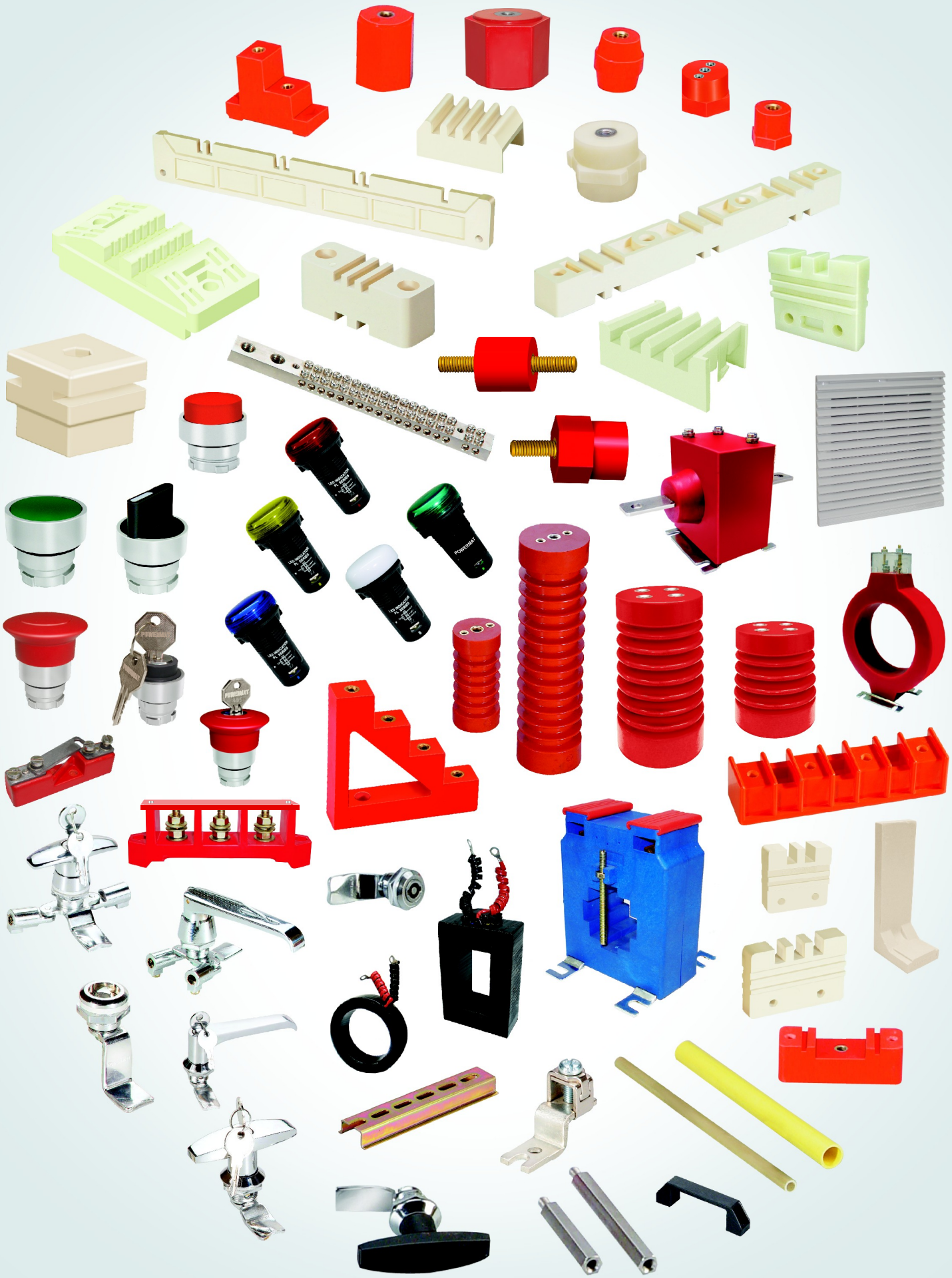

Company Profile

Powercam Electricals (P) Ltd. was incorporated in the year 1990 with the objective of providing quality components for Electrical Control Panels, Distribution Boards and Bus Ducts. The company is operating in Indian and International Markets and producing wide range of control panel and distribution board components like Stand Off Insulators and Busbar Supports in DMC, SMC and Polyamide, MV Insulators, Push Buttons, Pilot Lamps, Current Transformers, Potential Transformers, Panels locks, Hinges, Handles, Air Vents, Document Holders, Terminal Connectors, Brass Terminal Bars and PVC Heat Shrinkable Sleeves under the brand name of ***POWERMAT***

From the time of its inception, the company has grown its designing, engineering, tooling, manufacturing and testing capabilities to become the market leaders in the field. At ***POWERMAT*** we are striving to understand changing customer needs and enrich the quality of their products by simply making the technology readily usable for them. We are proud to have trained professionals, who study, design, develop, enhance, customize and use of various aspects of products manufactured by us. The quality and design has always been the most emphasized area at ***POWERMAT*** manufacturing facilities. A free technical consultancy service is available for Short Circuit Testing for designing of Power Control Centers with ***POWERMAT*** products. ***POWERMAT*** is committed for excellence in quality and our design department provides different application data to customers for ASTA, KEMA and CPRI testing. There is an on-going philosophy of research and development in providing advance solutions to customer requirement.

POWERMAT has its own compounding of DMC and SMC materials which are UL certified under different standards. The DMC and SMC materials produced are fully compliant with European Union directive 2002/95/EC for Restriction of Use of Hazardous Substances in electrical and electronic equipments (RoHS). The moulding facilities of the company have fully automatic compression moulding machines from 20 tons to 300 tons capacity, plastic injection moulding machines up to 250 Tons and zinc die casting machines up to 180 Tons. The company has Computer Aided Designing with integrated tool room facilities for producing critical dimensions of dies and moulds. By skillful composition of high quality material and tooling technology, the economics of scale have been achieved to produce low cost components without sacrificing mechanical strength and electrical performance of products.

POWERMAT has its own testing facilities for testing of raw materials, SMC, DMC and other plastic components for physical, mechanical and electrical properties as per ASTM, IEC, JIS and UL test methods. The jigs and fixtures are designed for testing different finished components depending on their application in the final product use.

The company is always willing to accept ideas provided by its employees at all levels and its valued customers for its product use in control panels, Bus Ducts, Rising Main and Distribution Boards and translates those ideas various type of products which has resulted into one of the largest range of Busbar Supports and Stand Off Insulators.

The Future

POWERMAT aims to continue to grow exponentially through major expansion programs in the coming years by introducing a range of products for electric panel boards. The ***POWERMAT*** group is currently investing heavily in research and development of new components for control panels. Thus the next few years will further see a stream of new ***POWERMAT*** products coming into the market.

Quality Certifications

KVQA

Certificate of Registration

(Quality Management System)

KVQA CERTIFICATION SERVICES PVT. LTD.

This is to certify that the Quality Management System of

POWERCAM ELECTRICALS (P) LTD.

11, MIE, Bahadurgarh, Haryana, India.

Has been found to be of the Quality Management System Standard

ISO 9001:2015

This certificate is valid for the following product or service range

Design & Manufacturing of Bus Bar Insulator and Supports in DMC & SMC.

Certificate No: KDACQ201711059

1st Surveillance Due On: 10/10/2018: Done On:
2nd Surveillance Due On: 10/10/2019: Done On:

Date Of Issue: 10, November, 2017
Valid Until: 09, November, 2020*

IAF

Issued by

Authorised signatory KVQA

DAC (Dubai Accreditation Centre) is a department within Dubai Municipality and is responsible for providing accreditation of conformity assessment bodies (CABs) in the fields of certification and inspection. Accreditation of DAC demonstrates the competence and independence of KVQA.

Accredited by a member of IAF's MLA for Quality Systems

To Check the Status of the Certification kindly log on to www.kvqa.in
F-300, Sector -63, Noida U.P., India. Ph-011-22711940, 22711941, email: delhi@kvqaindia.com
*Subject to successful completion of surveillance audits

DAC

CB-045-MS

cULus®

File No : E249670

CE

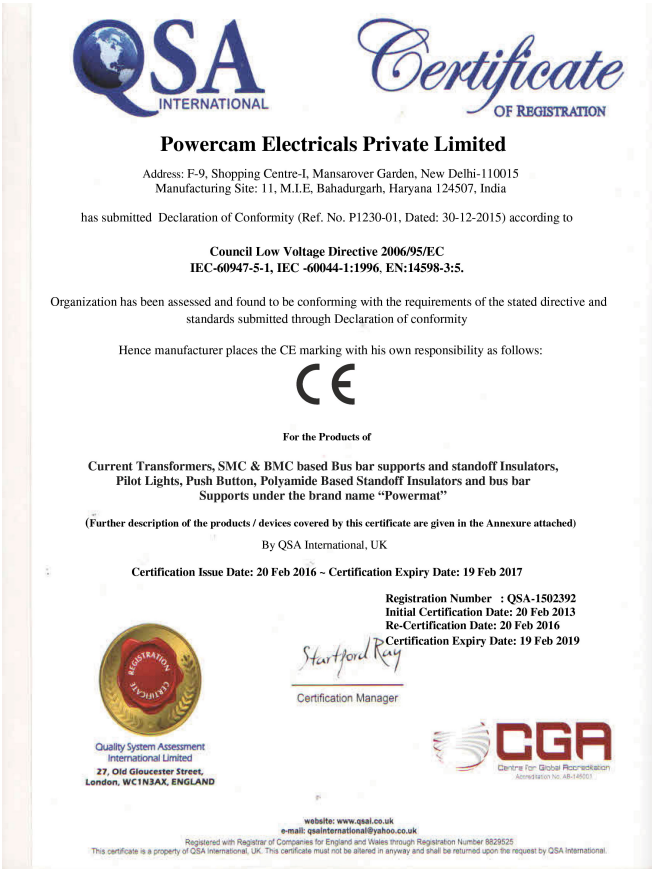

QSA INTERNATIONAL

Certificate OF REGISTRATION

Powercam Electricals Private Limited

Address: F-9, Shopping Centre-I, Mansarover Garden, New Delhi-110015
Manufacturing Site: 11, M.I.E, Bahadurgarh, Haryana 124507, India

has submitted Declaration of Conformity (Ref. No. P1230-01, Dated: 30-12-2015) according to

Council Low Voltage Directive 2006/95/EC
IEC-60947-5-1, IEC -60044-1:1996, EN:14598-3:5.

Organization has been assessed and found to be conforming with the requirements of the stated directive and standards submitted through Declaration of conformity

Hence manufacturer places the CE marking with his own responsibility as follows:

CE

For the Products of

Current Transformers, SMC & BMC based Bus bar supports and standoff Insulators, Pilot Lights, Push Button, Polyamide Based Standoff Insulators and bus bar Supports under the brand name "Powermat"

(Further description of the products / devices covered by this certificate are given in the Annexure attached)

By QSA International, UK

Certification Issue Date: 20 Feb 2016 ~ Certification Expiry Date: 19 Feb 2017

Registration Number : QSA-1502392
Initial Certification Date: 20 Feb 2013
Re-Certification Date: 20 Feb 2016
Certification Expiry Date: 19 Feb 2019

Stratford Ray

Certification Manager

Quality System Assessment International Limited
27, Old Gloucester Street, London, WC1N3AX, ENGLAND

CGA Centre for Global Accreditation

website: www.qsal.co.uk
e-mail: qsainternational@yahoo.co.uk
Registered with Registrar of Companies for England and Wales through Registration Number 8829525
This certificate is a property of QSA International, UK. This certificate must not be altered in anyway and shall be returned upon the request by QSA International.

Control and Signalling Devices Ø22.5 - Metallic Series

POWERMAT is well known brand in the field of Bus bar Support & Insulator. Our Technical expertise has achieved various landmark in the field of Insulators & Bus Bar Supports.
Now POWERMAT introduces Control & Signalling Device - Metallic Series.

Superior Design

Ø22.5 mm push button is designed and manufactured to demanding performance specification. Using state of art solid modelling techniques and finite element analysis, every component built into our series is optimised for durability and performance.

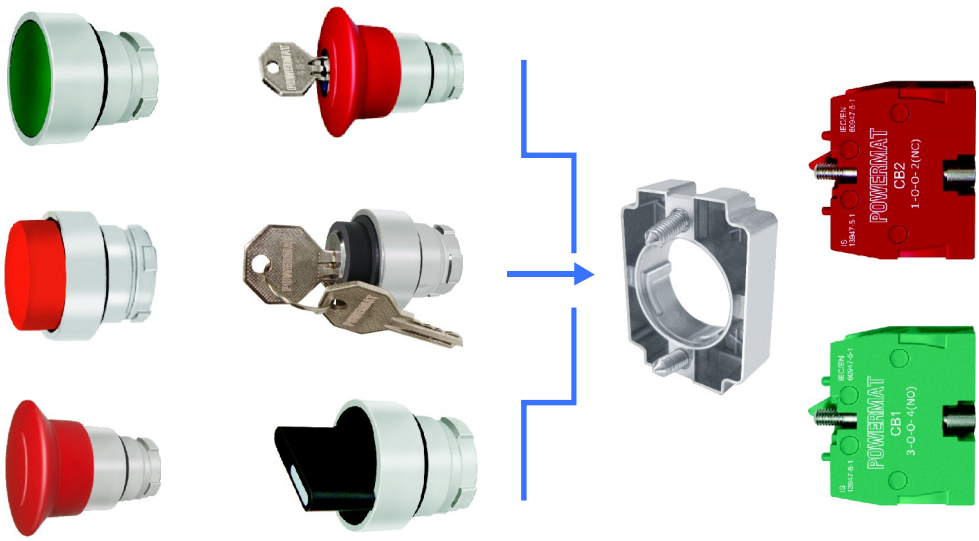

Ease in Assembly

POWERMAT provides Multiple Range of Normal & Selector Actuator with almost common & easy assembly option without much trouble & Hardware, hence to reduce the inventory time, labour & save the money.

Durable Materials

Control & signalling devices are made up of industrial grade thermoplastic for superior Electrical and Chemical Resistance.
Highly precise dies are used to mould the component to keep in mind to comply with all national & international standards.

Modular Flexibility & Sealing

Aesthetically good design & Nitrile Rubber seals are used to prevent the entrance of dust, dirt & moisture into the panel body. All norms of Degree of Protections are as per IEC 60529.

Contact Blocks - Normally Open (NO) & Normally Closed (NC)

Description

Contact element are double break & have self wiping contacts. The elements are interchangeable and can be staked without additional hardware.
Moving Contacts - Phosphor Bronze Tin Plated for better conductivity
Fixed Contacts - Electrical Grade Copper Tin Plated.
Contact Point - Bimetal (Copper & Silver) 0.26 mm Silver layer

CB1 (NO)

CB2 (NC)

Conformity & Standard Operational Conditions

Standard Conformity	CSA - C22.2 No. 14-95 , IEC-60947-5-1
Degree of Protection (Actuator)	IP 65 as per IEC 60529
Ambient	minus 25°C to 70°C
Operating Position	All Position

Electricals and Mechanical Characteristics Environment

Rated Insulation Voltage	500 V
Rated Thermal Current	10 Amp.
Contact	Self Wiping, Slow Break NO or NC
Make and break capacity	AC 15 : 415 V AC , 4 A
as per IEC 60947-5-1	DC 13: 110 V DC , 0.5 A
Terminal Capacity	Min 1 x 0.5 mm^2 , max. 2 x 1.5 mm^2 or 1 x 2.5 mm^2
Terminal Marking	1-2 for NC , 3-4 for NO
Short Circuit Protection	10 A cartridge fuse HRC type, rated for resistive loading
Mechanical Life	Over 1 million operations

Electric Rating

operation at 3600 cycles per hours,

load factor 0.5)

AC 15

V	24	120	230
A	4	3	2

DC 13

V	24	110
A	0.5	0.2

Non Illuminated Actuators

Flush Type

Product Description	Element	Switch Action	Color	Contact Element Code	Code
Ø22 mm Compact Push Button, Metallic Series, Chrome Plated Outer & Inner Body, Without Marking	1 NO + 1 NC 1 NO + 1 NO 1 NC + 1 NC 1 NC + 1 NO	Momentary Type	RED	CB1 for NO	PFT01R
			BLUE		PFT01B
			GREEN		PFT01G
			YELLOW	CB2 for NC	PFT01Y
			BLACK		PFT01K
			WHITE		PFT01W

Projecting Type

Ø22 mm Compact Push Button, Metallic Series, Chrome Plated Outer & Inner Body, Without Marking	1 NO + 1 NC 1 NO + 1 NO 1 NC + 1 NC 1 NC + 1 NO	Momentary Type	RED	CB1 for NO	PPT01R
			BLUE		PPT01B
			GREEN		PPT01G
			YELLOW	CB2 for NC	PPT01Y
			BLACK		PPT01K
			WHITE		PPT01W

Mushroom Ø40 mm (Momentary Type)

Ø40 mm Mushroom Type, Metallic Series, Chrome Plated Outer & Inner Body, Without Marking	1 NO + 1 NC 1 NO + 1 NO 1 NC + 1 NC 1 NC + 1 NO	Momentary Type	RED	CB1 for NO	PMT01R
				CB2 for NC	

Mushroom Ø40 mm (Latching Type)

Ø40 mm Mushroom Type, Metallic Series, Chrome Plated, Press to Lock and Turn to Reset	1 NO + 1 NC 1 NO + 1 NO 1 NC + 1 NC 1 NC + 1 NO	Maintained Type	RED	CB1 for NO	PML01R
				CB2 for NC	

Mushroom Ø40 mm (Latching with Key Type)

Ø40 mm Mushroom Type, Metallic Series, Chrome Plated Outer & Inner Body, Without Marking	1 NO + 1 NC 1 NO + 1 NO 1 NC + 1 NC 1 NC + 1 NO	Maintained Type	RED	CB1 for NO	PMK01R
				CB2 for NC	

Selector Actuator (Key Selector)

Ø22 mm Selector Actuator (Key Selector), Metallic Series, Chrome Plated Outer & Inner Body	1 NO + 1 NC 1 NO + 1 NO 1 NC + 1 NC 1 NC + 1 NO	Maintained Type	BLACK	CB1 for NO	PSK01K
				CB2 for NC	

Selector Actuator (Two Position, Three Position & Spring Return)

Ø22 mm Selector Actuator (Two Position & Three Position), Metallic Series, Chrome Plated Outer & Inner Body	1 NO + 1 NC 1 NO + 1 NO 1 NC + 1 NC 1 NC + 1 NO	Maintained Type L R	BLACK	CB1 for NO	PST01K
		L C R			PSH01K
		Momentary Type L ↔ R		CB2 for NC	PSR01K

Pilot Lights (Super Bright LED Light)

Description

Pilot Lights has a variant from 12 V AC/DC to 240 V AC & 22O V DC. Three Super Bright LED which collectively give Lux from 450 to 2000. The design of Lense & Reflector is done in such a way that the emitting light will have a wider visibility. All component in Pilot Lights are PCB Mounted & tight fit in terminals made up of Phosphor Bronze whose spring action provide a strong & tougher grip to PCB. Back cover is provided in the same color of the pilot light. This will ease the task of a person while fixing wire at the backside of Panel.

Technical Specification

Current Consumption (Applicable to all colours)	
12 VAC/DC , 110 VAC & 240 VAC	Max. 20 mA
110 VDC	Max. 15 mA
220 VDC	Max. 10 mA
Service Life (at nominal voltage & at ambient temp of 25 deg. C)	100,000 hours
Voltage limits (nominal voltage)	< 20% of rated Volt. >
Terminal Capacity	min. 1 x 0.5 mm^2 ,max. 2 x 1.5 mm^2 or 1 x 2.5 mm^2
Maximum Lumen @ lense of Pilot Lamp	

DESCRIPTION	INTENSITY IN LUX * (Depending on Voltage)
Super Bright Red Color	700 - 1000
Super Bright Blue Color	450 - 700
Super Bright Yellow Color	750 - 925
Super Bright Green Color	1500 - 1900
Super Bright White Color	2000 - 2500
Super Bright Amber Color	500 - 700

Pilot Lights (12 V AC/DC to 240 V AC/DC)

DESCRIPTION	CAT. NO.
POWER LED Indicator Red 12V AC/DC	PLR012AD
POWER LED Indicator Red 24V AC/DC	PLR024AD
POWER LED Indicator Red 30V AC/DC	PLR030AD
POWER LED Indicator Red 48V AC/DC	PLR048AD
POWER LED Indicator Red 110V AC	PLR110A
POWER LED Indicator Red 110V DC	PLR110D
POWER LED Indicator Red 240V AC	PLR240A
POWER LED Indicator Red 220V DC	PLR220D

DESCRIPTION	CAT. NO.
POWER LED Indicator Blue 12V AC/DC	PLB012AD
POWER LED Indicator Blue 24V AC/DC	PLB024AD
POWER LED Indicator Blue 30V AC/DC	PLB030AD
POWER LED Indicator Blue 48V AC/DC	PLB048AD
POWER LED Indicator Blue 110V AC	PLB110A
POWER LED Indicator Blue 110V DC	PLB110D
POWER LED Indicator Blue 240V AC	PLB240A
POWER LED Indicator Blue 220V DC	PLB220D

DESCRIPTION	CAT. NO.
POWER LED Indicator Green 12V AC/DC	PLG012AD
POWER LED Indicator Green 24V AC/DC	PLG024AD
POWER LED Indicator Green 30V AC/DC	PLG030AD
POWER LED Indicator Green 48V AC/DC	PLG048AD
POWER LED Indicator Green 110V AC	PLG110A
POWER LED Indicator Green 110V DC	PLG110D
POWER LED Indicator Green 240V AC	PLG240A
POWER LED Indicator Green 220V DC	PLG220D

DESCRIPTION	CAT. NO.
POWER LED Indicator Yellow 12V AC/DC	PLY012AD
POWER LED Indicator Yellow 24V AC/DC	PLY024AD
POWER LED Indicator Yellow 30V AC/DC	PLY030AD
POWER LED Indicator Yellow 48V AC/DC	PLY048AD
POWER LED Indicator Yellow 110V AC	PLY110A
POWER LED Indicator Yellow 110V DC	PLY110D
POWER LED Indicator Yellow 240V AC	PLY240A
POWER LED Indicator Yellow 220V DC	PLY220D

DESCRIPTION	CAT. NO.
POWER LED Indicator White 12V AC/DC	PLW012AD
POWER LED Indicator White 24V AC/DC	PLW024AD
POWER LED Indicator White 30V AC/DC	PLW030AD
POWER LED Indicator White 48V AC/DC	PLW048AD
POWER LED Indicator White 110V AC	PLW110A
POWER LED Indicator White 110V DC	PLW110D
POWER LED Indicator White 240V AC	PLW240A
POWER LED Indicator White 220V DC	PLW220D

DESCRIPTION	CAT. NO.
POWER LED Indicator Amber 12V AC/DC	PLA012AD
POWER LED Indicator Amber 24V AC/DC	PLA024AD
POWER LED Indicator Amber 30V AC/DC	PLA030AD
POWER LED Indicator Amber 48V AC/DC	PLA048AD
POWER LED Indicator Amber 110V AC	PLA110A
POWER LED Indicator Amber 110V DC	PLA110D
POWER LED Indicator Amber 240V AC	PLA240A
POWER LED Indicator Amber 220V DC	PLA220D

Current Transformer

In continuance with the objective of delivering Quality Components for Electric Control Panels, Distribution Boards and Bus Ducts, now We are pleased to announce our Range of METERING, PROTECTIVE, SUMMATION, SPECIAL CLASS X & INTER-POSING CURRENT TRANSFORMERS. We have facility to manufacture Current Transformer in Resin Cast, Tape Wound & Molded Case with different Burden (1.25VA to 30VA or as Customized by Customer), Class Ratios (0.2, 0.5,1,3 & 5) & Insulation Class (A, B & F)

A Current Transformer is defined as "an instrument transformer in which the secondary current is substantially proportional to the primary current (under normal conditions of operation) and differs in phase from it by an angle which is approximately zero for an appropriate direction of the connections." This highlights the accuracy requirement of the current transformer but also important is the isolating function, which means no matter what the system voltage the secondary circuit need be insulated only for a low voltage.

The Current Transformer works on the principle of variable flux. In the "ideal" Current Transformer, secondary current would be exactly equal (when multiplied by the turn's ratio) and opposite of the primary current. But, as in The Voltage Transformer, some of the primary current or the primary ampere-turns are utilized for magnetizing the core, thus leaving less than the actual primary ampere turns to be "transformed" into the secondary ampere-turns. This naturally introduces an error in the transformation. The error is classified into two-the current or ratio error and the phase error.

Metering CTs are designed with smaller cores and VA capacities. This causes metering CTs to saturate at lower secondary voltages saving sensitive connected metering devices from damaging large fault currents in the event of a primary electrical fault

Class X CTs are special designed current transformers & are used in mainly in the Balanced Protection System.

Summation CTs obtains the factorial sum of the currents of several lines belonging to one voltage system. The use of this Current Transformer is necessary when the ratios of the main current transformer are not equal in order to obtain a correct factorial sum, it is necessary to specify the ratio values of the individual main current transformer.

Inter-Posing CTs which are interposed between the main current transformer & the burden (VA) so that secondary current of the main Current Transformer is adjusted as required by the Burden. It is also used to correct for phase displacement for differential protection of transformers.

We have Lab Facility in House to Routine Test (Accuracy Test, Dielectric Insulation Test) of our Current Transformer as per IS 2705:1992, 3156:1992 & IEC 60044-1, 60044-2.

Ring Type Metering Current Transformers Tape Wound

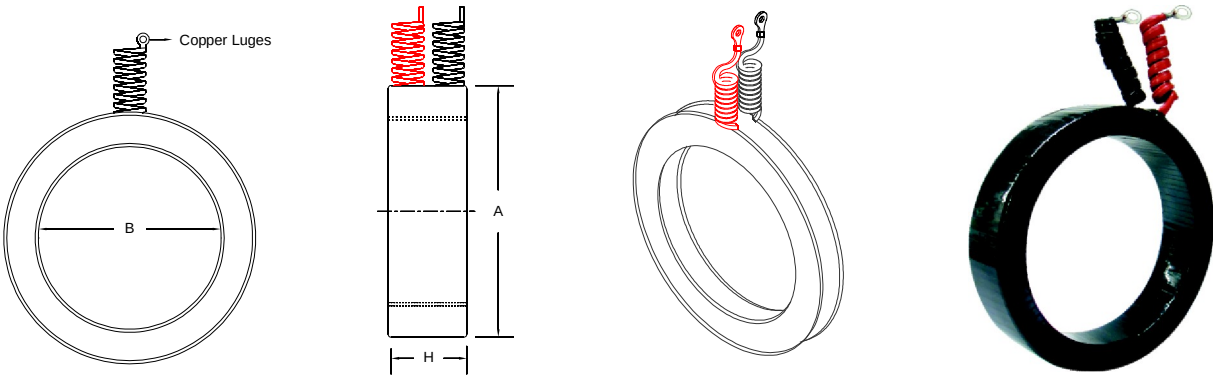

Product Code	Ratio Range	VA at Class 3	VA at Class 1	VA at Class 0.5	Dimensions (mm) A	B	H
MTO 80-5B	75 / 5	5	—	—	70	32	70
MTO 105-5B	100 / 5	—	5	—	70	32	50
MTO 155-5B	150 / 5	—	5	—	70	32	40
MTO 205-5B	200 / 5	—	5	—	70	32	30
MTO 305-5B	300 / 5	—	5	—	80	55	40
MTO 405-5B	400 / 5	—	5	—	80	55	30
MTO 405-15B	400 / 5	—	15	—	98	62	35
MTO 505-15B	500 / 5	—	15	—	98	62	35
MTO 605-15B	600 / 5	—	15	—	98	62	35
MTO 805-15B	800 / 5	—	15	—	115	80	35
MTO 1005-15B	1000 / 5	—	15	—	115	80	35
MTO 1205-15B	1200 / 5	—	15	—	115	80	35
MTO 1505-15B	1500 / 5	—	15	—	145	115	35
MTO 2005-15B	2000 / 5	—	15	—	145	115	35
MTO 3005-15B	3000 / 5	—	15		175	130	35

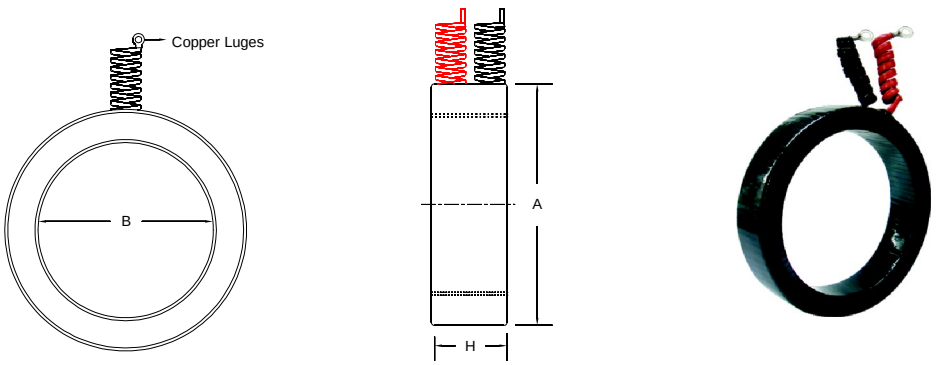

Product Code	Ratio Range	VA at Class 3	VA at Class 1	VA at Class 0.5	Dimensions (mm) A	B	H
MTO 105-5C	100 / 5	—	—	5	70	32	65
MTO 155-5C	150 / 5	—	—	5	70	32	50
MTO 205-5C	200 / 5	—	—	5	80	45	30
MTO 305-5C	300 / 5	—	—	5	80	45	30
MTO 405-5C	400 / 5	—	—	5	80	55	30
MTO 505-5C	500 / 5	—	—	5	92	62	30
MTO 605-5C	600 / 5	—	—	5	92	62	30
MTO 805-5C	800 / 5	—	—	5	115	80	30
MTO 1005-5C	1000 / 5	—	—	5	115	80	30
MTO 1205-5C	1200 / 5	—	—	5	175	115	30

All Dimensions are in MM • Above Current Transformers are CE certified.

Ring Type Metering Current Transformers Tape Wound

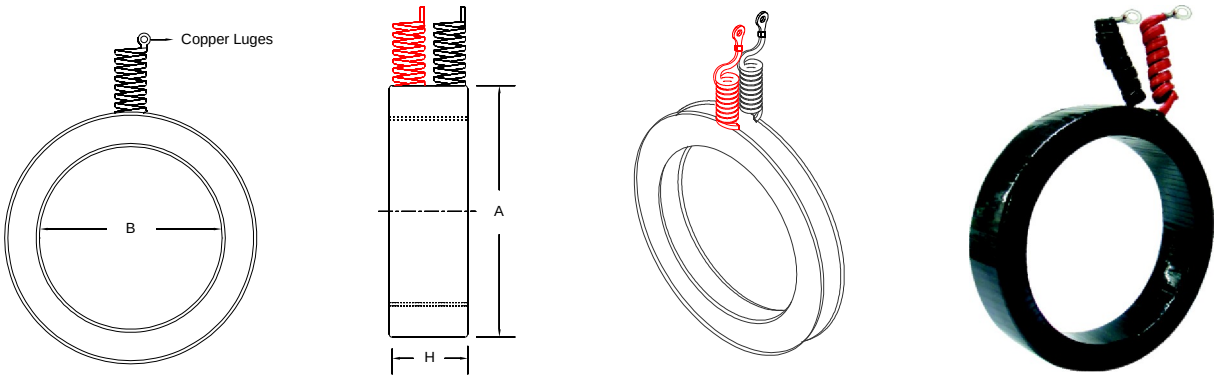

Product Code	Ratio Range	VA at Class 3	VA at Class 1	VA at Class 0.5	Dimensions (mm) A	B	H
MTO 76-5B	75 / 1	—	5	—	70	32	70
MTO 101-5B	100 / 1	—	5	—	70	32	50
MTO 151-5B	150 / 1	—	5	—	70	32	40
MTO 201-5B	200 / 1	—	5	—	70	32	40
MTO 301-5B	300 / 1	—	5	—	80	55	40
MTO 401-5B	400 / 1	—	5	—	80	55	30
MTO 401-15B	400 / 1	—	15	—	98	62	35
MTO 501-15B	500 / 1	—	15	—	98	62	35
MTO 601-15B	600 / 1	—	15	—	98	62	35
MTO 801-15B	800 / 1	—	15	—	115	80	30
MTO 1001-15B	1000 / 1	—	15	—	115	80	30
MTO 1201-15B	1200 / 1	—	15	—	115	80	30
MTO 1501-15B	1500 / 1	—	15	—	145	115	30
MTO 2001-15B	2000 / 1	—	15	—	145	115	30
MTO 3001-15B	3000 / 1	—	15	—	175	130	35

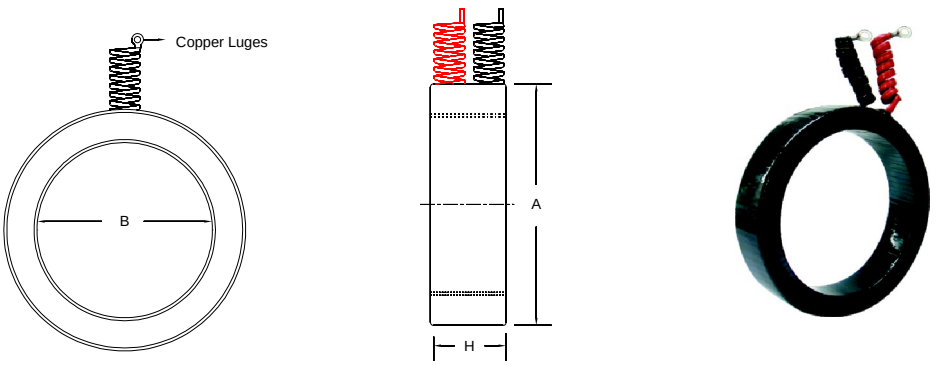

Product Code	Ratio Range	VA at Class 3	VA at Class 1	VA at Class 0.5	Dimensions (mm) A	B	H
MTO 101-5C	100 / 1	—	—	5	70	32	65
MTO 151-5C	150 / 1	—	—	5	70	32	55
MTO 201-5C	200 / 1	—	—	5	80	45	30
MTO 301-5C	300 / 1	—	—	5	80	45	30
MTO 401-5C	400 / 1	—	—	5	80	55	30
MTO 501-5C	500 / 1	—	—	5	92	62	30
MTO 601-5C	600 / 1	—	—	5	92	60	30
MTO 801-5C	800 / 1	—	—	5	115	80	30
MTO 1001-5C	1000 / 1	—	—	5	115	80	30
MTO 1201-5C	1200 / 1	—	—	5	175	115	30

All Dimensions are in MM • Above Current Transformers are CE certified.

Rectangular Metering Current Transformers Tape Wound

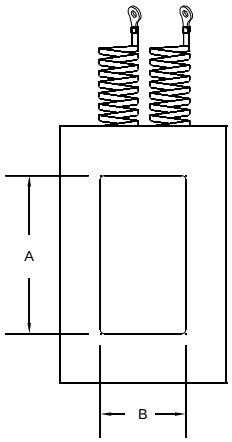

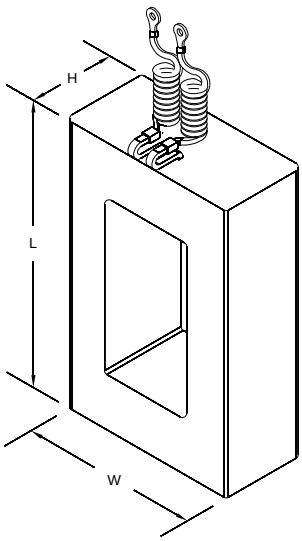

Product Code	Ratio Range	VA at Class 3	VA at Class 1	VA at Class 0.5	Dimensions (mm) L x W	A x B	H*
MTS 305-15B	300 / 5	—	15	—	110 x 75	55 x 20	50
MTS 405-15B	400 / 5	—	15	—	110 x 75	55 x 20	50
MTS 505-15B	500 / 5	—	15	—	110 x 75	55 x 20	50
MTS 605-15B	600 / 5	—	15	—	110 x 75	55 x 20	50
MTS 805-15B	800 / 5	—	15	—	150 x 80	105 x 35	50
MTS 1005-15B	1000 / 5	—	15	—	150 x 80	105 x 35	50
MTS 1205-15B	1200 / 5	—	15	—	150 x 80	105 x 35	50
MTS 1505-15B	1500 / 5	—	15	—	200 x 95	155 x 50	40 - 50
MTS 2005-15B	2000 / 5	—	15	—	200 x 95	155 x 50	40 - 50
MTS 3005-15B	3000 / 5	—	15	—	200 x 95	155 x 90	40 - 50
MTS 301-15B	300 / 1	—	15	—	110 x 75	55 x 20	50
MTS 401-15B	400 / 1	—	15	—	110 x 75	55 x 20	50
MTS 501-15B	500 / 1	—	15	—	110 x 75	55 x 20	50
MTS 601-15B	600 / 1	—	15	—	110 x 75	55 x 20	50
MTS 801-15B	800 / 1	—	15	—	150 x 80	105 x 35	50
MTS 1001-15B	1000 / 1	—	15	—	150 x 80	105 x 35	50
MTS 1201-15B	1200 / 1	—	15	—	150 x 80	105 x 35	50
MTS 1501-15B	1500 / 1	—	15	—	200 x 95	155 x 50	40 - 50
MTS 2001-15B	2000 / 1	—	15	—	200 x 95	155 x 50	40 - 50
MTS 3001-15B	3000 / 1	—	15	—	200 x 95	155 x 90	40 - 50

Rectanglur protective Current Transformers Tape Wound

15 VA 5P 10

Product Code	Ratio Range	VA at 5P 10	VA at 5P 15	VA at 5P 20	Dimensions (mm) L x W	A x B	H*
PTS 205-15D	200 / 5	15	—	—	120 x 90	50 x 20	100 - 120
PTS 305-15D	300 / 5	15	—	—	120 x 90	50 x 20	100 - 120
PTS 405-15D	400 / 5	15	—	—	120 x 90	50 x 20	100
PTS 505-15D	500 / 5	15	—	—	120 x 90	50 x 20	80 - 100
PTS 605-15D	600 / 5	15	—	—	120 x 90	50 x 20	70 - 100
PTS 805-15D	800 / 5	15	—	—	175 x 105	105 x 35	70 - 80
PTS 1005-15D	1000 / 5	15	—	—	175 x 105	105 x 35	70 - 80
PTS 1205-15D	1200 / 5	15	—	—	175 x 105	105 x 35	60 - 80
PTS 1505-15D	1500 / 5	15	—	—	220 x 120	150 x 50	70 - 80
PTS 2005-15D	2000 / 5	15	—	—	220 x 120	150 x 50	60
PTS 3005-15D	3000 / 5	15	—	—	220 x 120	150 x 50	60

H (min. to max.)*

All Dimensions are in MM • Above Current Transformers are CE certified.

Rectangular Protective Current Transformers Tape Wound

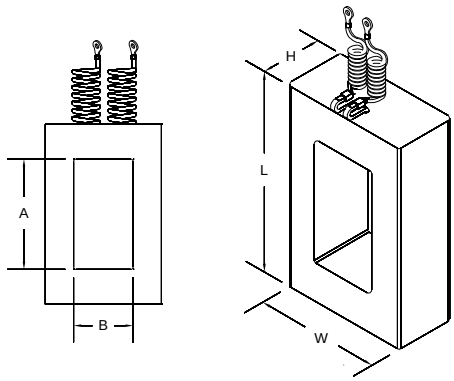

15 VA 5P 10

Product Code	Ratio Range	VA at 5P 10	VA at 5P 15	VA at 5P 20	Dimensions (mm) L x W	A x B	H*
PTS 201-15D	200 / 1	15	—	—	120 x 90	50 x 20	100 - 120
PTS 301-15D	300 / 1	15	—	—	120 x 90	50 x 20	100 - 120
PTS 401-15D	400 / 1	15	—	—	120 x 90	50 x 20	100
PTS 501-15D	500 / 1	15	—	—	120 x 90	50 x 20	80 - 100
PTS 601-15D	600 / 1	15	—	—	120 x 90	50 x 20	70 - 100
PTS 801-15D	800 / 1	15	—	—	175 x 105	105 x 35	70 - 80
PTS 1001-15D	1000 / 1	15	—	—	175 x 105	105 x 35	70 - 80
PTS 1201-15D	1200 / 1	15	—	—	175 x 105	105 x 35	60 - 80
PTS 1501-15D	1500 / 1	15	—	—	220 x 120	150 x 50	70 - 80
PTS 2001-15D	2000 / 1	15	—	—	220 x 120	150 x 50	60
PTS 3001-15D	3000 / 1	15	—	—	220 x 120	150 x 50	60

Ring Type Protective Current Transformers Tape Wound

15 VA 5P 10

Product Code	Ratio Range	VA at 5P 10	VA at 5P 15	VA at 5P 20	Dimensions (mm) A	B	H
PTO 205-15D	200 / 5	15	—	—	175	50	70
PTO 305-15D	300 / 5	15	—	—	165	50	60
PTO 405-15D	400 / 5	15	—	—	155	50	50
PTO 505-15D	500 / 5	15	—	—	155	50	50
PTO 605-15D	600 / 5	15	—	—	165	65	50
PTO 805-15D	800 / 5	15	—	—	155	65	50
PTO 1005-15D	1000 / 5	15	—	—	190	105	50
PTO 1205-15D	1205 / 5	15	—	—	190	105	50
PTO 1505-15D	1500 / 5	15	—	—	190	105	40
PTO 2005-15D	2000 / 5	15	—	—	190	155	40
PTO 3005-15D	3000 / 5	15	—	—	190	155	35

15 VA 5P 10

PTO 201-15D	200 / 1	15	—	—	175	50	70
PTO 301-15D	300 / 1	15	—	—	165	50	60
PTO 401-15D	400 / 1	15	—	—	155	50	50
PTO 501-15D	500 / 1	15	—	—	155	50	50
PTO 601-15D	600 / 1	15	—	—	165	65	50
PTO 801-15D	800 / 1	15	—	—	155	65	50
PTO 1001-15D	1000 / 1	15	—	—	190	105	50
PTO 1201-15D	1205 / 1	15	—	—	190	105	50
PTO 1501-15D	1500 / 1	15	—	—	190	105	40
PTO 2001-15D	2000 / 1	15	—	—	190	155	40
PTO 3001-15D	3000 / 1	15	—	—	190	155	35

H (min. to max.)*

All Dimensions are in MM • Above Current Transformers are CE certified.

Ring Type Metering Current Transformers

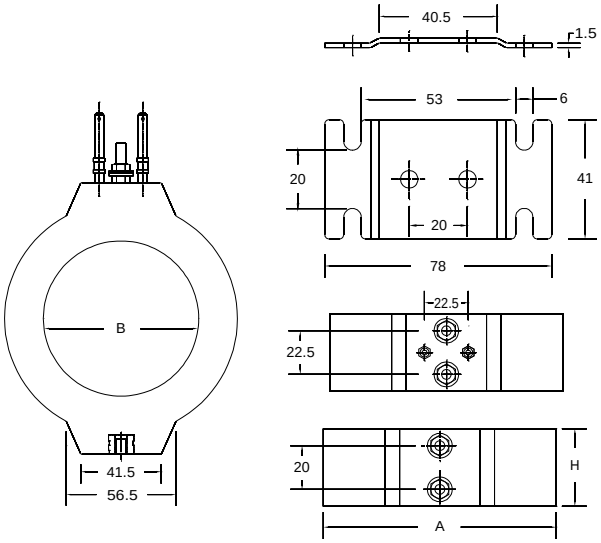

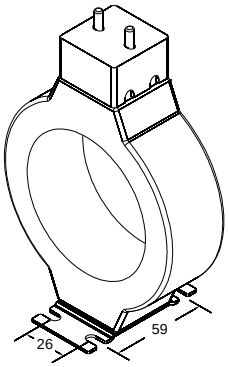

Product Code	Ratio Range	VA at Class 3	VA at Class 1	VA at Class 0.5	Dimensions (mm) A	B	H
MRO80-5B	75 / 5	—	5	—	80	30	70
MRO105-5B	100 / 5	—	5	—	80	30	50
MRO155-5B	150 / 5	—	5	—	90	30	40
MRO205-5B	200 / 5	—	5	—	90	30	40
MRO305-5B	300 / 5	—	5	—	90	30	40
MRO405-5B	400 / 5	—	5	—	90	30	40
MRO405-15B	400 / 5	—	15	—	100	55	40
MRO505-15B	500 / 5	—	15	—	100	55	40
MRO605-15B	600 / 5	—	15	—	100	55	40
MRO805-15B	800 / 5	—	15	—	120	80	40
MRO1005-15B	1000 / 5	—	15	—	120	80	40
MRO1205-15B	1200 / 5	—	15	—	120	80	40
MRO1505-15B	1500 / 5	—	15	—	150	105	40
MR02005-15B	2000 / 5	—	—	15	150	105	40

Product Code	Ratio Range	VA at Class 3	VA at Class 1	VA at Class 0.5	Dimensions (mm) A	B	H
MRO105-5C	100 / 5	—	—	5	90	30	50
MRO155-5C	150 / 5	—	—	5	90	30	40
MRO205-5C	200 / 5	—	—	5	90	40	40
MRO305-5C	300 / 5	—	—	5	90	55	40
MRO405-5C	400 / 5	—	—	5	90	55	40
MRO505-5C	500 / 5	—	—	5	90	55	40
MRO605-5C	600 / 5	—	—	5	90	55	40
MR0805-5C	800 / 5	—	—	5	120	80	40
MRO1005-5C	1000 / 5	—	—	5	120	80	40

All Dimensions are in MM • Above Current Transformers are CE certified.

Ring Type Metering Current Transformers

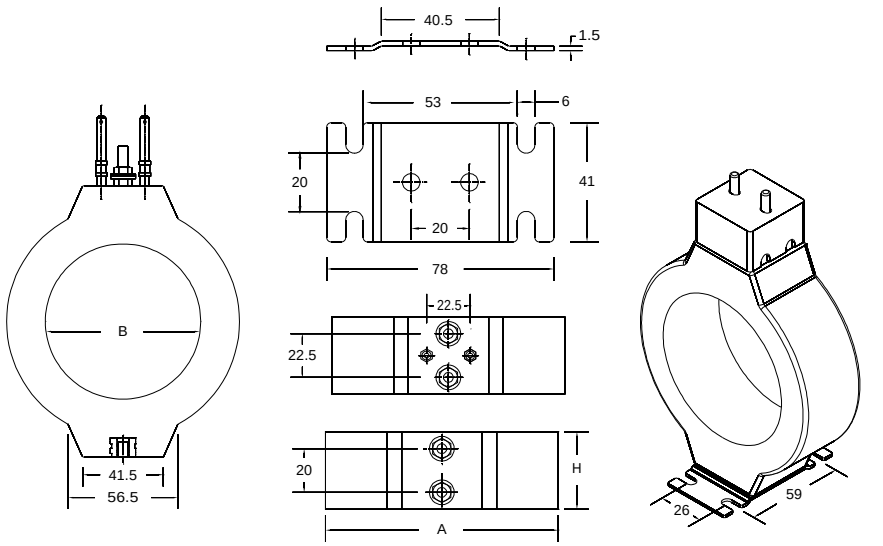

Product Code	Ratio Range	VA at Class 3	VA at Class 1	VA at Class 0.5	Dimensions (mm) A	B	H
MRO76-5B	75 / 1	—	5	—	90	30	70
MRO101-5B	100 / 1	—	5	—	90	30	50
MRO151-5B	150 / 1	—	5	—	90	30	40
MRO201-5B	200 / 1	—	5	—	90	30	40
MRO301-5B	300 / 1	—	5	—	90	30	40
MRO401-5B	400 / 1	—	5	—	90	30	40
MRO401-15B	400 / 1	—	15	—	100	55	40
MRO501-15B	500 / 1	—	15	—	100	55	40
MRO601-15B	600 / 1	—	15	—	100	55	40
MRO801-15B	800 / 1	—	15	—	120	80	40
MRO1001-15B	1000 / 1	—	15	—	120	80	40
MRO1201-15B	1200 / 1	—	15	—	120	80	40
MRO1501-15B	1500 / 1	—	15	—	150	105	40
MR02001-15B	2000 / 1	—	—	15	150	105	40

Product Code	Ratio Range	VA at Class 3	VA at Class 1	VA at Class 0.5	Dimensions (mm) A	B	H
MRO101-5C	100 / 1	—	—	5	90	30	50
MRO151-5C	150 / 1	—	—	5	90	30	40
MRO201-5C	200 / 1	—	—	5	90	40	40
MRO301-5C	300 / 1	—	—	5	90	55	40
MRO401-5C	400 / 1	—	—	5	90	55	40
MRO501-5C	500 / 1	—	—	5	90	55	40
MRO601-5C	600 / 1	—	—	5	90	55	40
MR0801-5C	800 / 1	—	—	5	120	80	40
MRO1001-5C	1000 / 1	—	—	5	120	80	40

All Dimensions are in MM • Above Current Transformers are CE certified.

Ring Type Protective Current Transformers

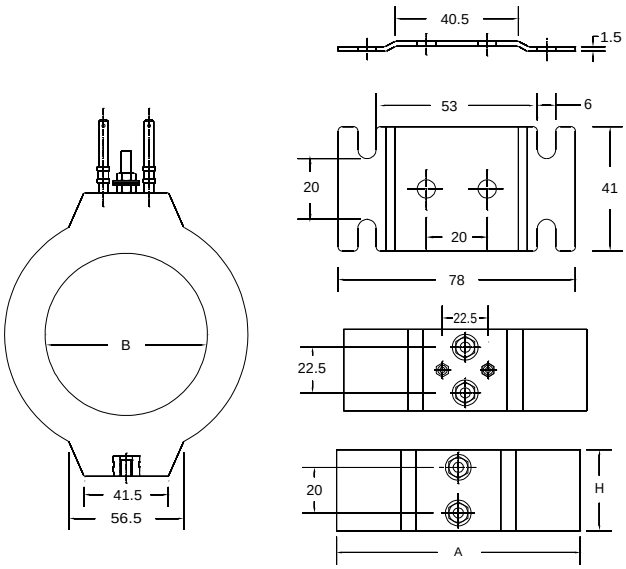

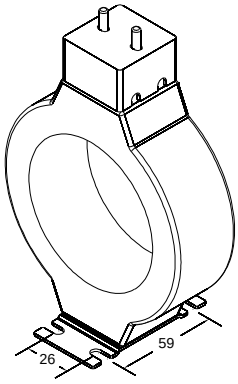

15 VA 5P 10

Product Code	Ratio Range	VA at 5P 10	VA at 5P 15	VA at 5P 20	Dimensions (mm) A	B	H
PRO205-15D	200 / 5	15	—	—	205	50	80
PRO305-15D	300 / 5	15	—	—	205	50	60
PRO405-15D	450 / 5	15	—	—	205	50	60
PRO505-15D	500 / 5	15	—	—	205	65	60
PRO605-15D	600 / 5	15	—	—	205	65	60
PRO805-15D	800 / 5	15	—	—	205	110	60
PRO1005-15D	1000 / 5	15	—	—	205	110	60
PRO1205-15D	1200 / 5	15	—	—	205	110	60
PRO1505-15D	1500 / 5	15	—	—	185	110	40
PRO2005-15D	2000 / 5	15	—	—	185	110	40

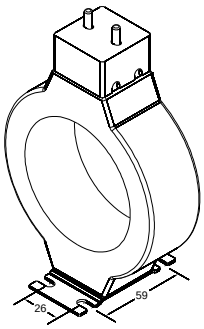

15 VA 5P 10

Product Code	Ratio Range	VA at 5P 10	VA at 5P 15	VA at 5P 20	Dimensions (mm) A	B	H
PRO201-15D	200 / 1	15	—	—	205	50	80
PRO301-15D	300 / 1	15	—	—	205	50	60
PRO401-15D	450 / 1	15	—	—	205	50	60
PRO501-15D	500 / 1	15	—	—	205	65	60
PRO601-15D	600 / 1	15	—	—	205	65	60
PRO801-15D	800 / 1	15	—	—	205	110	60
PRO1001-15D	1000 / 1	15	—	—	205	110	60
PRO1201-15D	1200 / 1	15	—	—	205	110	60
PRO1501-15D	1500 / 1	15	—	—	185	110	40
PRO2001-15D	2000 / 1	15	—	—	185	110	40

All Dimensions are in MM • Above Current Transformers are CE certified.

Rectangular Metering Current Transformers

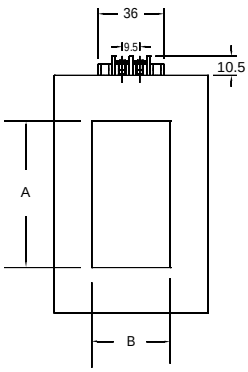

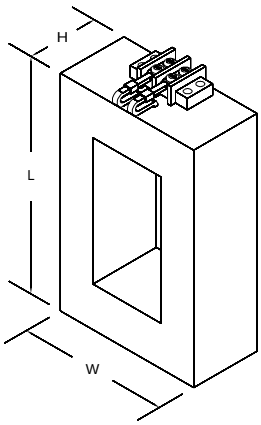

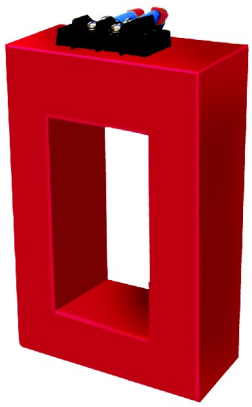

Product Code	Ratio Range	VA at Class 3	VA at Class 1	VA at Class 0.5	Dimensions (mm) L x W	A x B	H*
MRS305-15B	300 / 5	—	15	—	110 x 75	55 x 20	50
MRS405-15B	400 / 5	—	15	—	110 x 75	55 x 20	50
MRS505-15B	500 / 5	—	15	—	110 x 75	55 x 20	50
MRS605-15B	600 / 5	—	15	—	110 x 75	55 x 20	50
MRS805-15B	800 / 5	—	15	—	150 x 80	105 x 35	50
MRS1005-15B	1000 / 5	—	15	—	150 x 80	105 x 35	50
MRS1205-15B	1200 / 5	—	15	—	200 x 95	155 x 50	40 - 50
MRS1505-15B	1500 / 5	—	15	—	200 x 95	155 x 50	40 - 50
MRS2005-15B	2000 / 5	—	15	—	200 x 95	155 x 50	40 - 50
MRS301-15B	300 / 1	—	15	—	110 x 75	55 x 20	50
MRS401-15B	400 / 1	—	15	—	110 x 75	55 x 20	50
MRS501-15B	500 / 1	—	15	—	110 x 75	55 x 20	50
MRS601-15B	600 / 1	—	15	—	110 x 75	55 x 20	50
MRS801-15B	800 / 1	—	15	—	150 x 80	105 x 35	50
MRS1001-15B	1000 / 1	—	15	—	150 x 80	105 x 35	50
MRS1201-15B	1200 / 1	—	15	—	200 x 95	155 x 50	40 - 50
MRS1501-15B	1500 / 1	—	15	—	200 x 95	155 x 50	40 - 50
MRS2001-15B	2000 / 1	—	15	—	200 x 95	155 x 50	40 - 50

Rectangular Protective Current Transformers

15 VA 5P 10

Product Code	Ratio Range	VA at 5P 10	VA at 5P 15	VA at 5P 20	Dimensions (mm) L x W	A x B	H*
PRS205-15D	200 / 5	15	—	—	120 x 90	50 x 20	100 - 120
PRS305-15D	300 / 5	15	—	—	120 x 90	50 x 20	100 - 120
PRS405-15D	400 / 5	15	—	—	120 x 90	50 x 20	100
PRS505-15D	500 / 5	15	—	—	120 x 90	50 x 20	100
PRS605-15D	600 / 5	15	—	—	120 x 90	50 x 20	100
PRS805-15D	800 / 5	15	—	—	170 x 105	100 x 35	70 - 80
PRS1005-15D	1000 / 5	15	—	—	170 x 105	100 x 35	70 - 80
PRS1205-15D	1200 / 5	15	—	—	170 x 105	100 x 35	70 - 80
PRS1505-15D	1500 / 5	15	—	—	220 x 120	150 x 50	70 - 80
PRS2005-15D	2000 / 5	15	—	—	220 x 120	150 x 50	70 - 80
PRS201-15D	200 / 1	15	—	—	120 x 90	50 x 20	100 - 120
PRS301-15D	300 / 1	15	—	—	120 x 90	50 x 20	100 - 120
PRS401-15D	400 / 1	15	—	—	120 x 90	50 x 20	100
PRS501-15D	500 / 1	15	—	—	120 x 90	50 x 20	100
PRS601-15D	600 / 1	15	—	—	120 x 90	50 x 20	100
PRS801-15D	800 / 1	15	—	—	170 x 105	100 x 35	70 - 80
PRS1001-15D	1000 / 1	15	—	—	170 x 105	100 x 35	70 - 80
PRS1201-15D	1200 / 1	15	—	—	170 x 105	100 x 35	70 - 80
PRS1501-15D	1500 / 1	15	—	—	220 x 120	150 x 50	70 - 80
PRS2001-15D	2000 / 1	15	—	—	220 x 120	150 x 50	70 - 80

H (min. to max.)*

All Dimensions are in MM • Above Current Transformers are CE certified.

Wound Type Metering Current Transformers

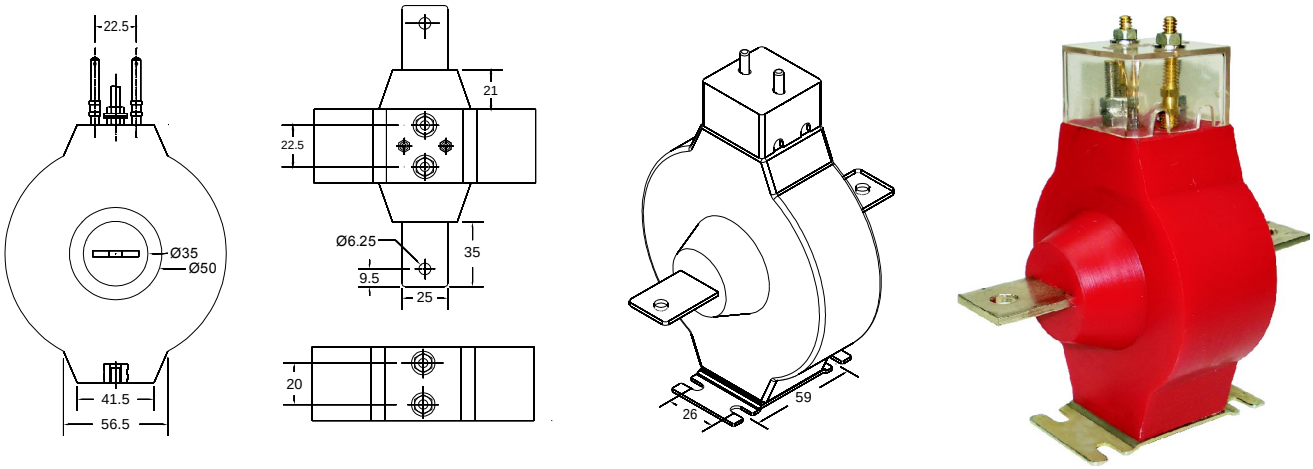

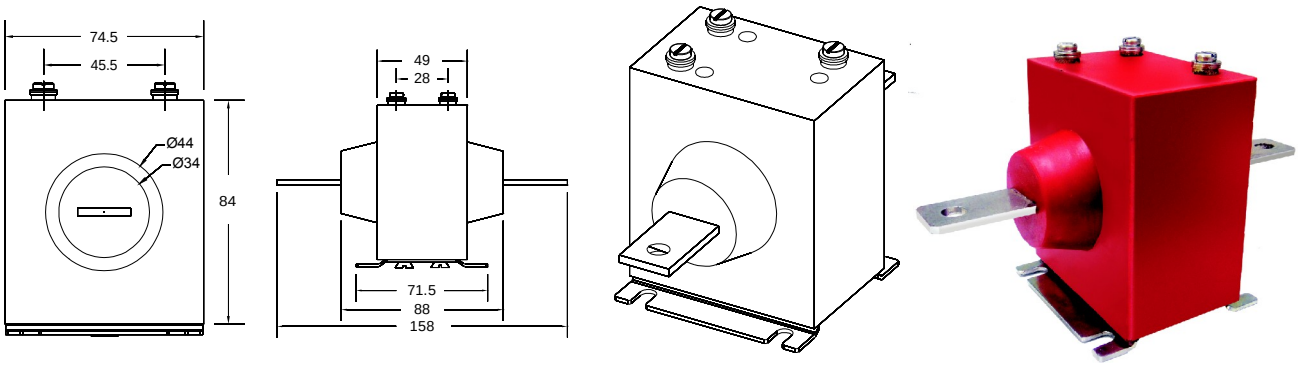

Product Code	Ratio Range	VA at Class 3	VA at Class 1	VA at Class 0.5	Dimensions (mm) A	B	H
MRW15-5B	10 / 5	—	5	—	—	—	—
MRW25-5B	20 / 5	—	5	—	—	—	—
MRW35-5B	30 / 5	—	5	—	—	—	—
MRW45-5B	40 / 5	—	5	—	—	—	—
MRW55-5B	50 / 5	—	5	—	—	—	—
MRW65-5B	60 / 5	—	5	—	—	—	—
MRW80-5C	75 / 5	—	—	5	—	—	—
MRW105-5C	100 / 5	—	—	5	—	—	—
MRW11-5B	10 / 1	—	5	—	—	—	—
MRW21-5B	20 / 1	—	5	—	—	—	—
MRW31-5B	30 / 1	—	5	—	—	—	—
MRW41-5B	40 / 1	—	5	—	—	—	—
MRW51-5B	50 / 1	—	5	—	—	—	—
MRW61-5B	60 / 1	—	5	—	—	—	—
MRW76-5C	75 / 1	—	—	5	—	—	—
MRW101-5C	100 / 1	—	—	5	—	—	—

All Dimensions are in MM • Above Current Transformers are CE certified.

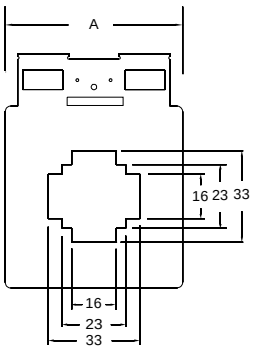

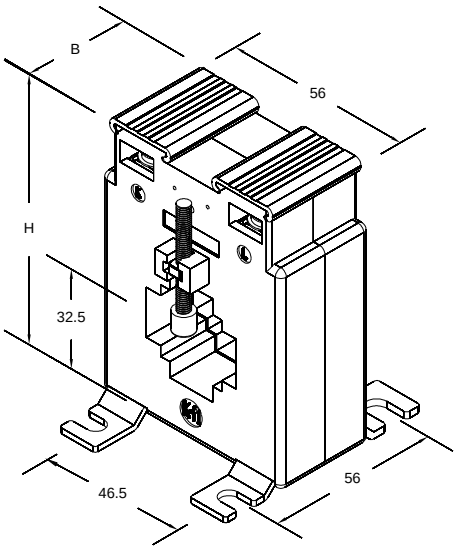

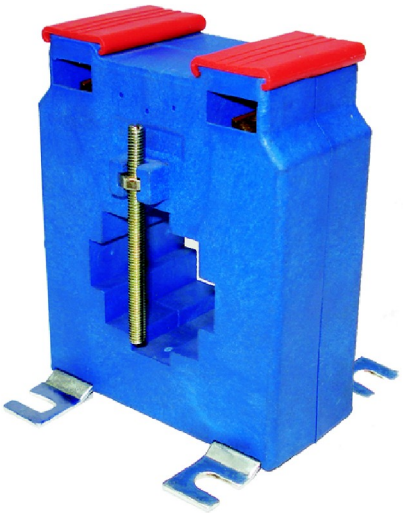

Product Code	Ratio Range	VA at Class 3	VA at Class 1	VA at Class 0.5	Dimensions (mm) A	B	H
MNB80-1A	75 / 5	1	—	—	65	32	86
MNB105-1B	100 / 5	—	1	—	65	32	86
MNB130-1B	125 / 5	—	1	—	65	32	86
MNB155-2.5B-5A	150 / 5	5	2.5	—	65	32	86
MNB205-2.5B-5A	200 / 5	5	2.5	—	65	32	86
MNB255-2.5B-5A	250 / 5	5	2.5	—	65	32	86
MNB305-2.5B-5A	300 / 5	5	2.5	—	65	32	86

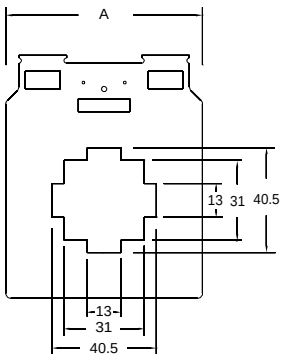

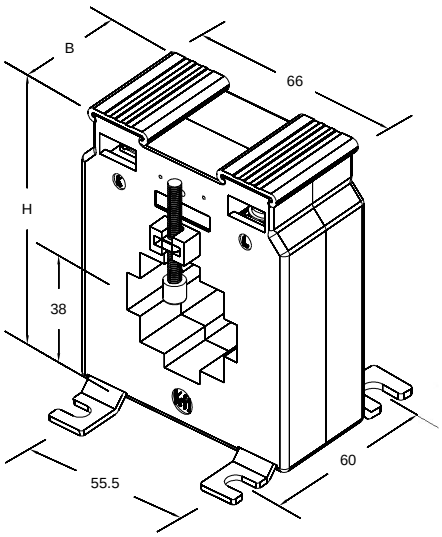

Product Code	Ratio Range	VA at Class 3	VA at Class 1	VA at Class 0.5	Dimensions (mm) A	B	H
MNB105-2.5C-5B	100 / 5	—	5	2.5	76	36	94
MNB155-5B-15A	150 / 5	15	5	—	76	36	94
MNB205-5C-15B	200 / 5	—	15	5	76	36	94
MNB255-5C-15B	250 / 5	—	15	5	76	36	94
MNB305-5C-15B	300 / 5	—	15	5	76	36	94
MNB405-5C-15B	400 / 5	—	15	5	76	36	94
MNB505-5C-15B	500 / 5	—	15	5	76	36	94
MNB605-5C-15B	600 / 5	—	15	5	76	36	94

All Dimensions are in MM • Above Current Transformers are CE certified.

Current Transformers
Moulded Case Measuring

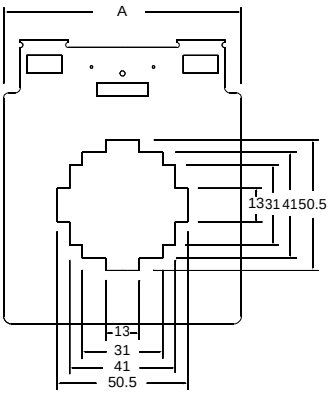

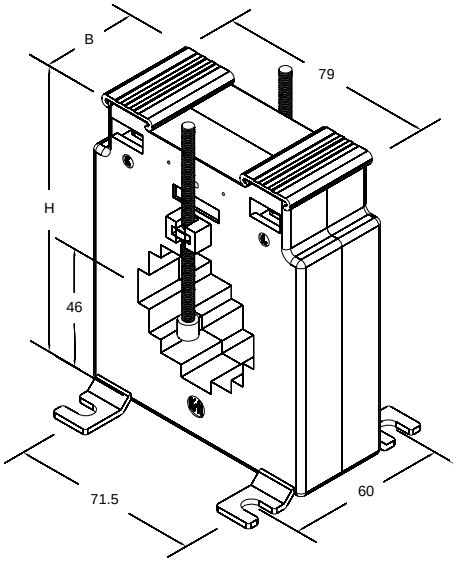

Product Code	Ratio Range	VA at Class 3	VA at Class 1	VA at Class 0.5	Dimensions (mm) A	B	H
MNB205-15B	200 / 5	—	15	—	92	36	110
MNB305-15B	300 / 5	—	15	—	92	36	110
MNB40515B	400 / 5	—	15	—	92	36	110
MNB505-15B	500 / 5	—	15	—	92	36	110
MNB60515B	600 / 5	—	15	—	92	36	110
MNB805-15B	800 / 5	—	15	—	92	36	110

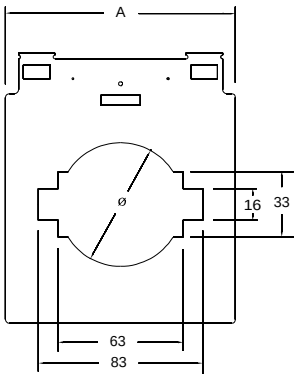

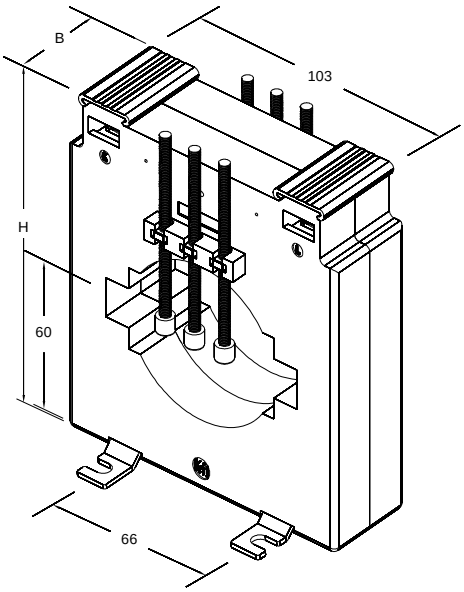

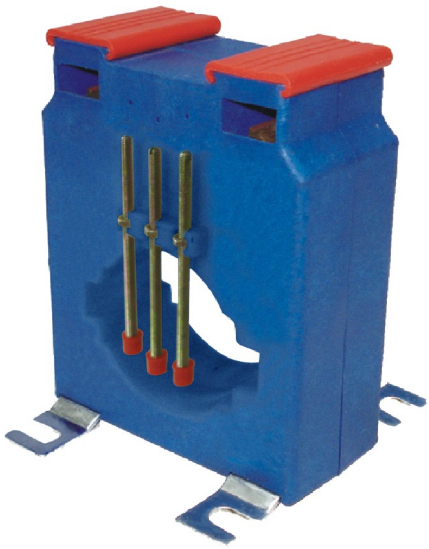

Product Code	Ratio Range	VA at Class 3	VA at Class 1	VA at Class 0.5	Dimensions (mm) A	B	H
MNB805-15B	800 / 5	—	15	—	116	36	136.5
MNB1005-15B	1000 / 5	—	15	—	116	36	136.5
MNB1205-15B	1200 / 5	—	15	—	116	36	136.5
MNB1505-15B	1500 / 5	—	15	—	116	36	136.5
MNB2005-15B	2000 / 5	—	15	—	116	36	136.5
MNB3005-15B	3000 / 5	—	15	—	116	36	136.5

All Dimensions are in MM • Above Current Transformers are CE certified.

Busbar Insulators & Supports

An **electrical insulator** is a material whose internal electric charges do not flow freely, and therefore very hard to conduct an electric current under the influence of an electric field. A perfect insulator does not exist, but some materials such as glass, paper and Teflon, which have high resistivity, are very good electrical insulators. Insulators are used in electrical equipment to support and separate electrical conductors without allowing current through themselves.

Electric insulation is a vital part of an electrical power system. Although the cost of insulation is only a small fraction of the apparatus or line cost, line performance is highly dependent on insulation integrity. Insulation failure may cause permanent equipment damage and long-term outages. The potential financial losses emphasize the importance of a reliable design of the insulation.

The capacities of modern-day electrical plant and machinery are such that the power handled by their control systems gives rise to very large forces. Bus bars, like all the other equipment in the system, have to be able to withstand these forces without damage. It is essential that the materials used in their construction should have the best possible mechanical properties and are designed to operate within the temperature limits laid down in BS 159, BS EN 60439-1:1994, or other national or international standards.

Busbar Insulator or support plays a vital role in the panel therefore one should be very careful while selecting the busbar insulator or support for their application. We use three type of material.

1. Sheet Molding Compound
2. Dough Molding Compound
3. Polyamide 6,6

1. Sheet Molding Compound (SMC)

Sheet Molding Compound (Halogen Free) is a polymeric composite material made of the mixture of Unsaturated Polymer Resin, Processing Additives, Cross Linked Catalyst, Shrink Control Polyester, Mould Release Agent, Fire Retardant Agent, Color Pigments, Inorganic Fillers, Glass Sheet (20% to 25%) & Other Additives. POWERMAT SMC (Halogen Free as per IEC : 61249-2-21) is certified by UL India, CE & Compliance with RoHS Norms.SMC is used for Bus bar Supports only. Flammability Index is V-0.

2. Dough Molding Compound (DMC)

Dough Molding Compound is a polymeric composite material made of the mixture of Unsaturated Polymer Resin, Processing Additives, Cross Linked Catalyst, Shrink Control Polyester, Mould Release Agent, Fire Retardant Agent, Color Pigments, Inorganic Fillers, Glass Chops (15% to 20%) & Other Additives. POWERMAT DMC (Halogen Free as per IEC : 61249-2-21) is certified by UL India, CE & Compliance with RoHS Norms. DMC can be used for Bus bar Insulators as well as for making Bus bar Supports. Flammability Index is V-0.

3. Polyamide 6,6

Polyamide 6,6 is a 17% glass fiber reinforced polyamide 66 resin. It is stronger material (Mechanically & Electrically) as compared to Sheet Molding Compound & Dough Molding Compound. Flammability Index of this material is HB as per UL 94. It has high wear & abrasive resistance, good insulating properties, resistance to alkalies & other organic chemicals.

Please see page no. 22 for Technical specification of DMC/SMC & Polyamide 6, 6

Technical Specification

PROPERTIES	UNITS	TEST METHODS	VALUES		
			SMC	DMC	POLYAMIDE
Physical					
Specific Gravity	-	ASTM D-792	1.7	1.9	1.39
Glass Contents	%	N/A	25	15	33
Water Absorption (24 Hrs)	%	ASTM D-570	0.2	0.15	1.2
Mechanical					
Tensile Strength	(Kgf/cm^2)	ASTM D-638	700	400	1200-1300
Flexural Strength	(Kgf/cm^2)	ASTM D-790	1550	900	2500-2800
Impact Strength Izod	(J/m)	ASTM D-265	600	250	117
Compressive Strength	(Kgf/cm^2)	ASTM D-695	1800	1500	NA
Electrical					
Dielectric Strength	(KV/mm)	ASTM D-149	12	10	20
Comparative Tracking Index	(Volts)	BS-5901	>600	>600	>600
ARC Resistance	(Secs.)	ASTM D-495	180	180	200
Flammability Index	-	UL-94	V-0	V-0	HB / V0
Glow Wire Ignition Test Over 3mm Thickness Specimen	(°C)	IEC-60695-2-13	960	960	746 / 930
Hot Wire Ignition Test	(Secs.)	ASTM D-3874	>120	>120	7-15
RTI, Str (Thickness 3mm)	(°C)	UL-746B	130	130	130
RTI, Elect. (Thickness 3mm)	(°C)	UL-746B	105	105	130
High Voltage Arc Tracking Rate	(mm/min)	UL-746A	0 through 10	0 through 10	over 10 through 25.4
High Amp Arc Ignition	(mean no. or arcs)	UL-746A	>120	>120	>120
Material Group	-	IEC-60112	1	1	1
Pollution Degree	-	IEC-60950	3	3	3
Insulation Class	-	JIS C 4003	B	B	B
Working Temp	(°C)	-	(-) 40°C to 135°C	(-) 40°C to 135°C	(-) 40°C to 135°C

TOLERANCE CHART

DIM (mm)	TOLERANCE (±)
1-15	0.25 mm
16-50	0.5 mm
51-100	1.0 mm
101- 250	1.5 mm
250 & above	2 mm

THE ABOVE VALUES ARE FOR THE STANDARD FORMULATION FOLLOWED BY THE COMPANY. WE HAVE FACILITIES FOR MANUFACTURING SMC, DMC & POLYAMIDE ACCORDING TO THE CUSTOMER REQUIREMENTS.

(SMC = SHEET MOULDING COMPOUND)
(DMC = DOUGH MOULDING COMPOUND)

IMPORTANT NOTE

FOR TECHNICAL NOTES OF DMC, SMC, BUS BAR SUPPORTS, SHORT CIRCUIT AND FAULT LEVEL CALCULATIONS PLEASE ASK FOR OUR LATEST TECHNICAL NOTES 01/15.

ALL DATA GIVEN IN THIS CATALOGUE HAS BEEN DETERMINED CAREFULLY AT THE COMPANY'S TEST LAB. WITH THE VARIETY OF PURPOSE FOR WHICH THE PRODUCTS ARE USED, AND THE METHODS AND APPLICATION TECHNIQUES EMPLOYED , HOWEVER THE DATA AND INFORMATION ARE GIVEN ONLY AS A GUIDE, AND ARE NOT BINDING. NO GUARANTEE OF THERE AUTHENTICITY CAN THEREFORE BE ASSUMED IN ALL SITUATIONS THE COMPANY RESERVES THE RIGHT TO MODIFY FEATURES WITHOUT PRIOR NOTICE IN VIEW OF CONTINUED IMPROVEMENTS AND DEVELOPMENTS.

Standoff Insulators (Polyamide-Supports)

POWERMAT Code	Dimension H mm	AF mm	Ø R mm	TL mm	Nominal Voltage (AC / DC)
PH 415 (M4)	15	15	12	3.5	800/1100
PH 420 (M4)	20	18	15	5	1100/1500
PH 620 (M6)	20	18	15	5	1100/1500
PH 525 (M5)	25	20	15	7	1400/1900
PH 625 (M6)	25	20	15	7	1400/1900
PH 630 (M6)	30	30	25	9	1600/2200
PH 830 (M8)	30	30	25	9	1600/2200
PH 635 (M6)	35	40	33	9	1900/2600
PH 835 (M8)	35	40	33	9	1900/2600
PH 1035 (M10)	35	40	34	9	1900/2600
PH 640 (M6)	40	45	40	12	2200/3000
PH 840 (M8)	40	45	40	12	2200/3000
PH 1040 (M10)	40	45	40	12	2200/3000
PH 845 (M8)	45	50	40	12	2500/3500
PH 1045 (M10)	45	50	40	12	2500/3500
PH 650 (M6)	50	50	40	12	2800/3900
PH 850 (M8)	50	50	40	17	2800/3900
PH 1050 (M10)	50	50	40	17	2800/3900
PH 860 (M8)	60	54	45	17	3300/4600
PH 1060 (M10)	60	54	45	17	3300/4600
PH 1260 (M12)	60	54	45	17	3300/4600
PH 1270 (M12)	70	65	50	21	3900/5400
PH 1670 (M16)	70	65	50	21	3900/5400
PH 1275 (M12)	75	65	50	21	4200/5800
PH 1675 (M16)	75	65	50	21	4200/5800
PH 1280 (M12)	80	65	50	26	4500/6300
PH 1680 (M16)	80	65	50	26	4500/6300
PH 12100 (M12)	100	65	50	26	5600/7800
PH 16100 (M16)	100	65	50	26	5600/7800

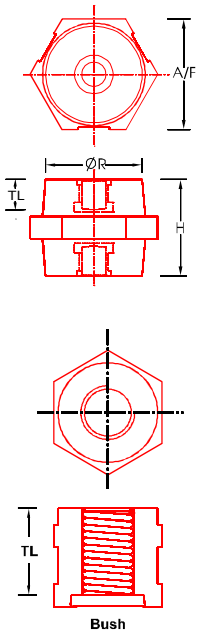

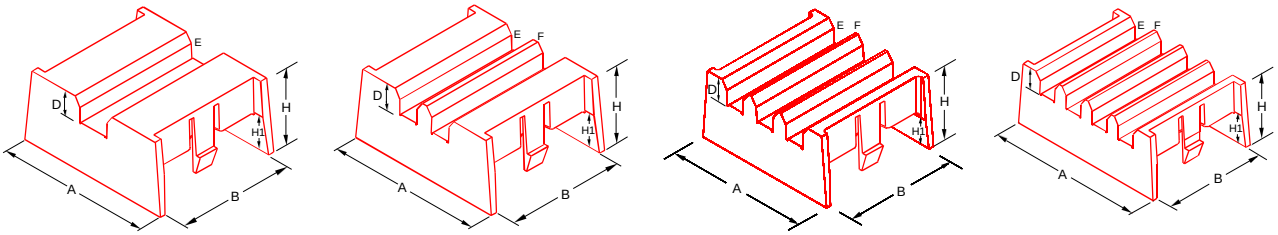

Grip Type Supports

Series	Busbar Details	POWERMAT Code	A	B	C	D	E	F	H	H1
PA	10mm x 1 run	PAGP 110	54	38	20	8	11	-	25	12.5
PA	12mm x 1 run	PAGP 112	54	38	20	8	13.7	-	25	12.5
PA	6mm x 2 run	PAGP 206	54	38	20	8	7	5.8	25	12.5
PA	10mm x 2 run	PAGP 210	54	38	20	8	11	9	25	12.5
PA	6mm x 3 run	PAGP 307	54	38	20	8	7	5.8	25	12.5
PA	6mm x 4 run	PAGP 407	64	38	30	8	7	5.4	25	12.5
PA	10mm x 5 run	PAGP 510	118	38	30	8	11.4	9	25	12

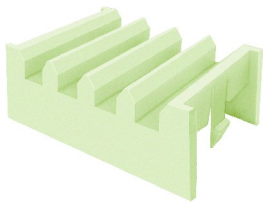

- Material : Polyamide / Nylon 6/6 (17% Glass Filled)
- All Dimensions are in MM
- TL : Effective Thread Length
- All Insulators are CE certified

- Insert : Aluminium / Brass / Steel (Zinc Passivated) / Stainless Steel
- Mounting Detail of PH and PAGP Series on Page No. 63, 64
- Insert Material detail on page no. 66

* For maximum torque please see page no. 66

- For technical details of Busbar support & Insulator, please refer POWERMAT TECHNICAL NOTES - 01/15.
- For checking the suitability of a support & insulator for a fault current, please ask for POWERMAT FAULT LEVEL CALCULATOR Software.

Finger Supports-N Series (Polyamide)

N1 Series

Busbar Details	POWERMAT Code	A	B	C	D	E	F	Sd
6mm x 1 run	106 N1	7	50	22	13	9	-	8
10mm x 1 run	110 N1	11	50	22	13	9	-	8
12mm x 1 run	112 N1	13.7	50	22	13	9	-	8

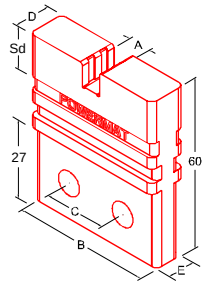

N3 Series

6mm x 1 run	106 N3	7	60	32	13	9	-	8
10mm x 1 run	110 N3	11	60	32	13	9	-	8
12mm x 1 run	112 N3	13.7	60	32	13	9	-	8
6mm x 2 runs	206 N3	7	60	32	13	9	5.8	8
10mm x 2 runs	210 N3	11	60	32	13	9	9	8
12mm x 2 runs	212 N3	13.7	60	32	13	9	11.8	8

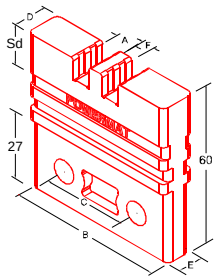

N4 Series

10mm x 3 runs	310 N4	11	85	50	13	9	9	8
12mm x 3 runs	312 N4	13.7	85	50	13	9	11	8
6mm x 4 runs	406 N4	7	85	50	13	9	5.6	8

N5 Series

6mm x 1 run	106 N5	7	70	40	20	14	-	8
10mm x 1 run	110 N5	11	70	40	20	14	-	8
12mm x 1 run	112 N5	13.7	70	40	20	14	-	8
6mm x 2 runs	206 N5	7	70	40	20	14	5.8	8
10mm x 2 runs	210 N5	11	70	40	20	14	9	8
12mm x 2 runs	212 N5	13.7	70	40	20	14	11	8
6mm x 3 runs	306 N5	7	70	40	20	14	5.8	8

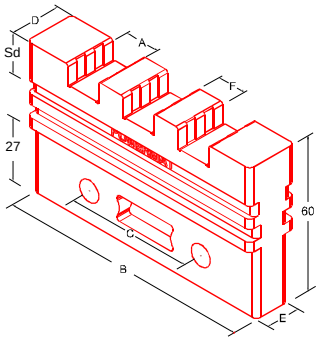

N7 Series

10mm x 3 runs	310 N7	11	100	50	20	14	9	8
12mm x 3 runs	312 N7	13.7	100	50	20	14	11	8
6mm x 4 runs	406 N7	7.2	100	50	20	14	5.6	8
6mm x 6 runs	606 N7	7.2	100	50	20	14	5	8

N9 Series

10mm x 4 runs	410 N9	11	130	80	20	14	9	8
12mm x 4 runs	412 N9	13.7	130	80	20	14	11	8

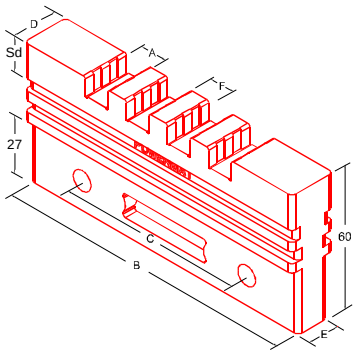

- Material : Polyamide / Nylon 6/6 (17% Glass Filled)
- All Dimensions are in MM
- Mounting Hole Ø 8.5mm
- Mounting Detail on Page No. 63, 64

- For technical details of Busbar support & Insulator, please refer POWERMAT TECHNICAL NOTES - 01/15.
- For checking the suitability of a support & insulator for a fault current, please ask for POWERMAT FAULT LEVEL CALCULATOR Software.

POWERMAT Code	Part Code	A max.	F min.
10mm x 2 runs	132PAGP210	11	9
12mm x 2 runs	132PAGP212	13.7	11
6mm x 3 runs	132PAGP306	7	5.4
6mm x 4 runs	132PAGP406	7.2	5.2

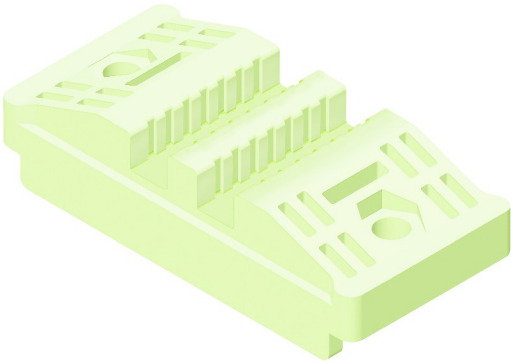

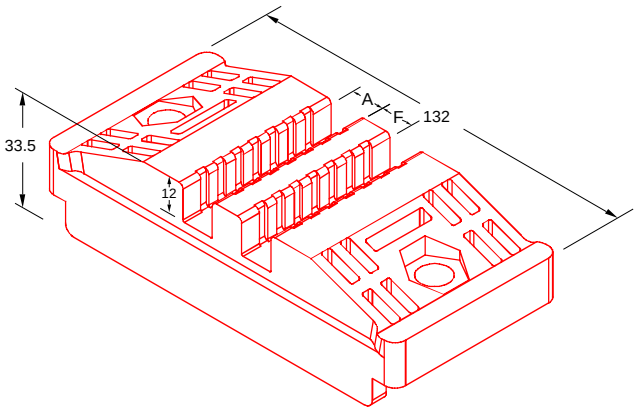

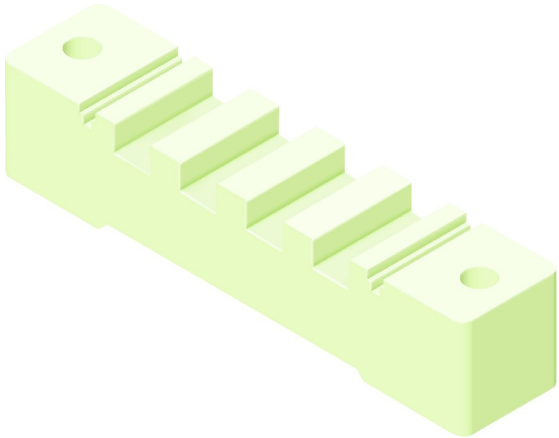

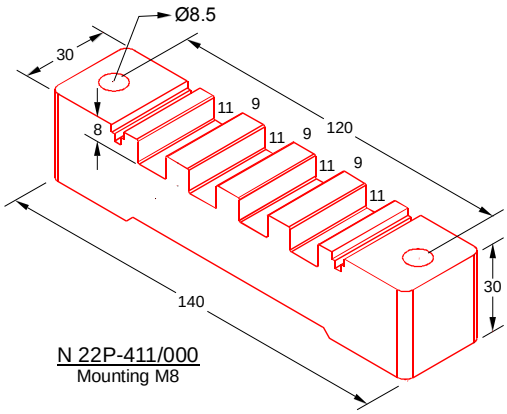

N 22P-411/000
Mounting M8

T-Support

POWERMAT Code	H mm	A mm
PAT - 85	85	52
PAT - 125	125	94

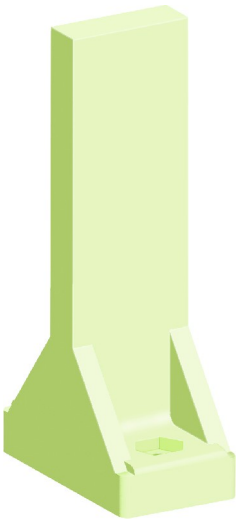

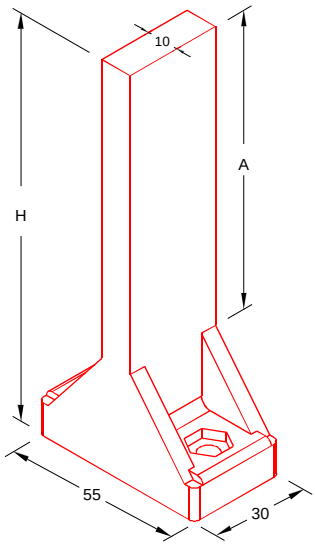

• Material : Polyamide / Nylon 6/6 (17% Glass Filled)
• All Dimensions are in MM

• Mounting Detail on Page No. 65

• For technical details of Busbar support & Insulator, please refer POWERMAT TECHNICAL NOTES - 01/15.
• For checking the suitability of a support & insulator for a fault current, please ask for POWERMAT FAULT LEVEL CALCULATOR Software.

Standoff Insulator

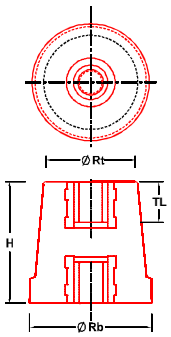

Conical

Part No. (Insert)	Height (H) mm	Dimension Rt Ø mm	Rb Ø mm	TL mm	Nominal Voltage (AC / DC)
C 625 (M6)	25	19	25	7	1000/1400
C 630 (M6)	30	25	30	7	1200/1600
C 830 (M8)	30	25	30	9	1200/1600
C 835 (M8)	35	28	35	12	1400/1900
C 640 (M6)	40	33	40	12	1600/2200
C 840 (M8)	40	33	40	12	1600/2200
C 1040 (M10)	40	33	40	12	1600/2200
C 845 (M8)	45	33	40	12	1800/2500
C 1050 (M10)	50	40	50	17	2000/2800
C 1250 (M12)	50	40	50	17	2000/2800
C 1060 (M10)	60	40	50	17	2400/3300
C 1260 (M12)	60	40	50	17	2400/3300
C 1070 (M10)	70	41	50	22	2800/3900
C 1270 (M12)	70	41	50	22	2800/3900

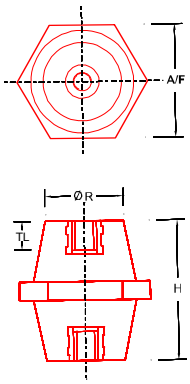

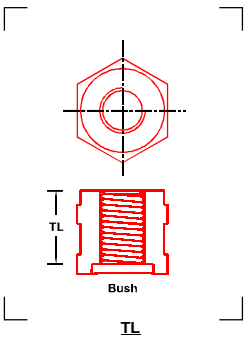

Hexagonal

Part No. (Insert)	Height (H) mm	Dimension AF mm	Ø R mm	TL mm	Nominal Voltage (AC / DC)
H 416 (M4)	16	14	11	3.5	640/800
H 516 (M5)	16	14	11	3.5	640/800
H 420 (M4)	20	18	14	5	800/1100
H 520 (M5)	20	18	14	5	800/1100
H 620 (M6)	20	18	14	5	800/1100
H 425 (M4)	25	21	16	7	1000/1400
H 525 (M5)	25	21	16	7	1000/1400
H 625 (M6)	25	25	22	7	1000/1400
MH 625 (M6)	25	19	17	7	1000/1400
H 825 (M8)	25	33	25	7	1000/1400
H 630 (M6)	30	32	25	9	1200/1600
H 830 (M6)	30	32	25	9	1200/1600
H 1030 (M10)	30	32	25	9	1200/1600
H 635 (M6)	35	32	26	9	1400/1900
H 835 (M8)	35	32	26	9	1400/1900
MH 835 (M8)	35	41	33	9	1400/1900
H 1035 (M10)	35	32	26	9	1400/1900
MH 1035 (M10)	35	41	33	9	1400/1900
H 640 (M6)	40	38	30	12	1600/2200
H 840 (M8)	40	38	30	12	1600/2200
H 1040 (M10)	40	38	30	12	1600/2200
H 645 (M6)	45	40	32	12	1800/2500
H 845 (M8)	45	40	32	12	1800/2500
H 1045 (M10)	45	40	32	12	1800/2500
H 850 (M8)	50	46	35.5	17	2000/2800
H 1050 (M10)	50	46	35.5	17	2000/2800
ENH 1050 (M10)	50	50	44.5	17	2000/2800
H 1250 (M12)	50	46	35.5	17	2000/2800
H 860 (M8)	60	50	38	17	2400/3300
H 1060 (M10)	60	50	38	17	2400/3300

- Material : DMC (Dough Moulding Compound) UL File No. QEUY2.E249670 (Halogen Free)
- Product : UL Certification File No. QEUY2.E314972
- All Dimensions are in MM
- TL : Effective Thread Length
- All Insulators are CE certified
- Insert : Aluminium / Brass / Steel (Zinc Passivated) / Stainless Steel
- Mounting Detail on Page No. 63
- Insert Material detail on page no. 66
- For maximum torque please see page no. 66

- For technical details of Busbar support & Insulator, please refer POWERMAT TECHNICAL NOTES - 01/15.
- For checking the suitability of a support & insulator for a fault current, please ask for POWERMAT FAULT LEVEL CALCULATOR Software.

Hexagonal

Part No. (Insert)	Height (H) mm	Dimension AF mm	Dimension Ø R mm	Dimension TL mm	Nominal Voltage (AC / DC)
H 1260 (M12)	60	50	38	17	2400/3300
ENH 1660 (M16)	60	60	55	22	2400/3300
H 865 (M8)	65	55	41	17	2600/3600
H 1065 (M10)	65	55	41	17	2600/3600
H 1265 (M12)	65	55	41	17	2600/3600
H 1070 (M10)	70	55	41	22	2800/3900
H 1270 (M12)	70	55	41	22	2800/3900
H 1670 (M16)	70	55	41	22	2800/3900
H 1075 (M10)	75	52.6	42	22	3000/4200
H 1275 (M12)	75	52.6	42	22	3000/4200
H 1076E (M10)	76	48	33	22	3000/4200
H 1276E (M12)	76	48	33	22	3000/4200

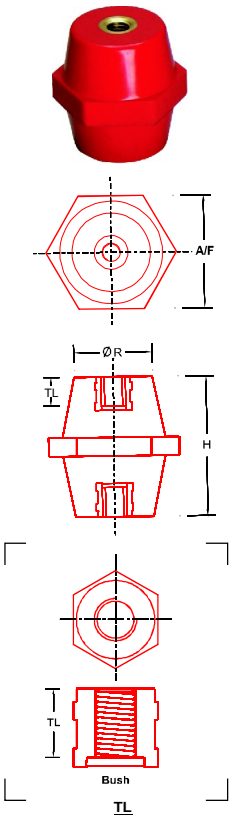

Drum

Part No. (Insert)	Height (H) mm	Dimension AF mm	Dimension Ø R mm	Dimension TL mm	Nominal Voltage (AC / DC)
D 420 (M4)	20	18	14.5	5	800/1100
D 620 (M4)	20	18	14.5	5	800/1100
D 425 (M4)	25	21	16	7	1000/1400
D 625 (M6)	25	21	16	7	1000/1400
D 630 (M6)	30	33	25	7	1200/1600
D 830 (M8)	30	33	26	9	1200/1600
D 635 (M6)	35	32	26	9	1400/1900
D 835 (M8)	35	32	26	9	1400/1900
D 1035 (M10)	35	32	26	9	1400/1900
D 840 (M8)	40	39	31	12	1600/2200
D 1040 (M10)	40	39	31	12	1600/2200
D 845 (M8)	45	41	32	12	1800/2500
D 1045 (M10)	45	41	32	12	1800/2500
D 1245 (M12)	45	41	32	12	1800/2500
D 850 (M8)	50	48	36	17	2000/2800
D 1050 (M10)	50	48	36	17	2000/2800
D 1250 (M12)	50	48	36	17	2000/2800
D 851E (M8)	51	35	27	17	2040/2800
D 1051E (M10)	51	35	27	17	2040/2800
D 860 (M8)	60	52	38	17	2400/3300
D 1060 (M10)	60	52	38	17	2400/3300
D 1260 (M12)	60	52	38	17	2400/3300
D 865 (M8)	65	55	41	22	2600/3600
D 1065 (M10)	65	55	41	22	2600/3600
D 1265 (M12)	65	55	41	22	2600/3600
D 1070 (M10)	70	55	42	22	2800/3900
D 1270 (M12)	70	55	42	22	2800/3900
D 1075 (M10)	75	55	42	22	3000/4200
D 1275 (M12)	75	55	42	22	3000/4200
D 1075E (M10)	76	50	34	22	3000/4200
D 1276 (M12)	76	54	42	22	3000/4200

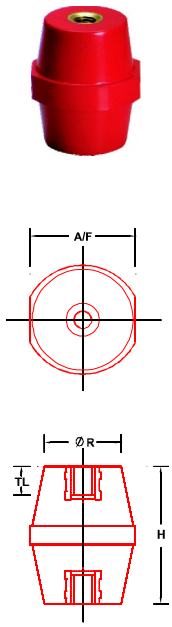

- Material : DMC (Dough Moulding Compound) c UL us UL File No. QEUY2.E249670 (Halogen Free)
- Product : UL Certification File No. QEUY2.E314972
- All Dimensions are in MM
- TL : Effective Thread Length
- All Insulators are CE certified

- Insert : Aluminium / Brass / Steel (Zinc Passivated) / Stainless Steel
- Mounting Detail on Page No. 63
- Insert Material detail on page no. 66
- For maximum torque please see page no. 66

- For technical details of Busbar support & Insulator, please refer POWERMAT TECHNICAL NOTES - 01/15.
- For checking the suitability of a support & insulator for a fault current, please ask for POWERMAT FAULT LEVEL CALCULATOR Software.

Cylindrical

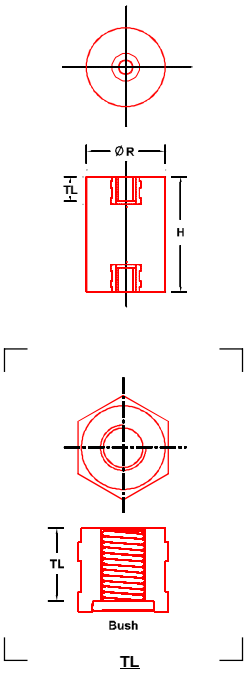

Part No. (Insert)	Height (H) mm	Dimension AF mm	Dimension Ø R mm	Dimension TL mm	Nominal Voltage (AC / DC)
CY 2223 (M8)	23	-	22	7	900/1200
CY 2225 (M6)	25	-	22	7	1000/1400
CY 2225 (M8)	25	-	22	7	1000/1400
CY 2630 (M8)	30	-	26	9	1200/1600
CY 2630 (M6)	30	-	26	9	1200/1600
CY 3030 (M6)	30	-	30	9	1200/1600
CY 3030 (M8)	30	-	30	9	1200/1600
CY 3030 (M10)	30	-	30	9	1200/1600
CY 4535 (M10)	35	-	45	9	1400/1900
CY 2640 (M8)	40	-	26	12	1600/2200
CY 3040 (M6)	40	-	30	12	1600/2200
CY 3040 (M8)	40	-	30	12	1600/2200
CY 3040 (M10)	40	-	30	12	1600/2200
CY 4040 (M8)	40	-	40	12	1600/2200
CY 4040 (M10)	40	-	40	12	1600/2200
CY 2650 (M6)	50	-	26	17	2000/2800
CY 3050 (M6)	50	-	30	17	2000/2800
CY 3050 (M8)	50	-	30	17	2000/2800
CY 3050 (M10)	50	-	30	17	2000/2800
CY 4050 (M8)	50	-	40	17	2000/2800
CY 4050 (M10)	50	-	40	17	2000/2800
CYD 4050 (M10)	50	-	40	17	2000/2800
CY 5050 (M10)	50	-	50	17	2000/2800
CY 5050 (M12)	50	-	50	17	2000/2800
CY 3051 (M8)	51	-	30	17	2040/2800
CY 2660 (M6)	60	-	26	17	2400/3300
CY 2660 (M8)	60	-	26	17	2400/3300
CY 2660 (M10)	60	-	26	17	2400/3300
CY 3060 (M6)	60	-	30	17	2400/3300
CY 3060 (M8)	60	-	30	17	2400/3300
CY 3060 (M10)	60	-	30	17	2400/3300
CY 5060 (M10)	60	-	50	17	2400/3300
CY 5060 (M12)	60	-	50	17	2400/3300
CY 6060 (M10)	60	-	60	17	2400/3300
CY 6060 (M12)	60	-	60	17	2400/3300
CY 2663 (M6)	63	-	26	17	2500/3500
CY 2663 (M8)	63	-	26	17	2500/3500
CY 2663 (M10)	63	-	26	17	2500/3500
CY 3076 (M10)	76	-	30	26	3000/4200
CY 2690 (M6)	90	-	26	12	3600/5000

- Material : DMC (Dough Moulding Compound) c UL us UL File No. QEUY2.E249670 (Halogen Free)
- Product : UL Certification File No. QEUY2.E314972
- All Dimensions are in MM
- TL : Effective Thread Length
- All Insulators are CE certified
- Insert : Aluminium / Brass / Steel (Zinc Passivated) / Stainless Steel
- Mounting Detail on Page No. 63
- Insert Material detail on page no. 66
- For maximum torque please see page no. 66

- For technical details of Busbar support & Insulator, please refer POWERMAT TECHNICAL NOTES - 01/15.
- For checking the suitability of a support & insulator for a fault current, please ask for POWERMAT FAULT LEVEL CALCULATOR Software.

Cylindrical Series (Male - Male Combination)

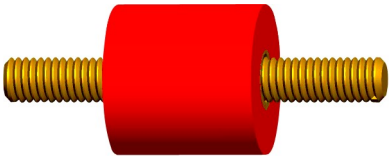

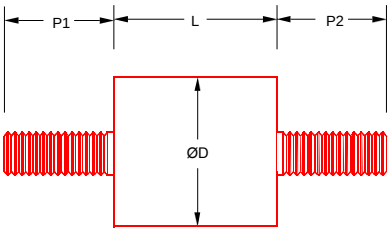

Part No.	Ø D mm	L mm	P1 mm	P2 mm	Nominal Voltage (AC / DC)
CY10.10-M3.05-M3.05	10	10	M3X5	M3X5	400/500
CY10.10-M3.05-M3.10	10	10	M3X5	M3X10	400/500
CY10.10-M3.08-M3.08	10	10	M3X8	M3X8	400/500
CY10.10-M3.10-M3.10	10	10	M3X10	M3X10	400/500
CY14.14-M3.10-M3.10	14	14	M3X10	M3X10	500/700
CY14.14-M4.10-M4.10	14	14	M4X10	M4X10	500/700
CY14.14-M5.10-M4.10	14	14	M5X10	M4X10	500/700
CY14.14-M5.10-M5.10	14	14	M5X10	M5X10	500/700
CY14.14-M6.10-M6.10	14	14	M6X10	M6X10	500/700
CY14.14-M6.10-M6.15	14	14	M6X10	M6X15	500/700
CY14.14-M6.15-M6.15	14	14	M6X15	M6X15	500/700
CY20.18-M6.07-M6.15	20	18	M6X7	M6X15	700/900
CY20.18-M6.15-M6.15	20	18	M6X15	M6X15	700/900
CY20.18-M6.15-M8.15	20	18	M6X15	M8X15	700/900
CY20.18-M8.08-M8.25	20	18	M8X8	M8X25	700/900
CY20.18-M8.20-M8.20	20	18	M8X20	M8X20	700/900

Cylindrical Series (Male - Female Combination)

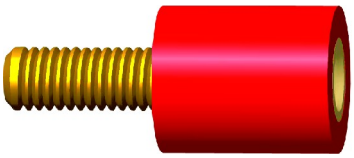

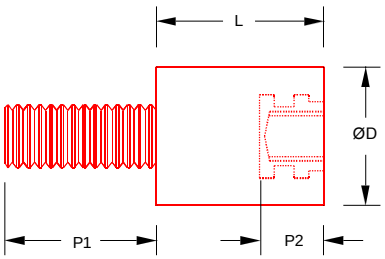

Part No.	Ø D mm	L mm	P1 mm	P2 mm	Nominal Voltage (AC / DC)
CY14.17-M5.08-F5.07	14	17	M5X8	M5X7	600/800
CY14.17-M5.10-F5.07	14	17	M5X10	M5X7	600/800
CY14.17-M6.15-F6.07	14	17	M6X15	M6X7	600/800
CY14.26-M4.10-F4.07	14	26	M4X10	M4X7	1000/1400

- Material : DMC (Dough Moulding Compound) UL File No. QEUY2.E249670 (Halogen Free)
- All Dimensions are in MM
- TL : Effective Thread Length
- All Insulators are CE certified
- Insert : Aluminium / Brass / Steel (Zinc Passivated) / Stainless Steel
- Mounting Detail on Page No. 63
- Insert Material detail on page no. 66
- For maximum torque please see page no. 66

- For technical details of Busbar support & Insulator, please refer POWERMAT TECHNICAL NOTES - 01/15.
- For checking the suitability of a support & insulator for a fault current, please ask for POWERMAT FAULT LEVEL CALCULATOR Software.

Full Hex

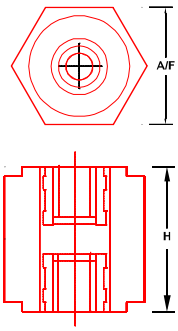

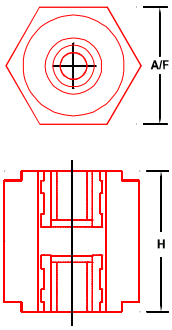

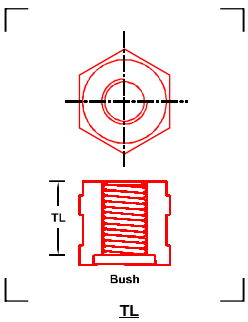

Part No. (Insert)	Height (H) mm	TL (mm)	Nominal Voltage (AC / DC)	Part No. (Insert)	Height (H) mm	TL (mm)	Nominal Voltage (AC / DC)
Hex Face to Face (A/F 14mm)							
14HH 415 (M4)	15	3.5	600/800	14HH 515 (M5)	15	3.5	600/800
14HH 420 (M4)	20	5	800/1100	14HH 520 (M5)	20	5	800/1100
14HH 425 (M4)	25	7	1000/1400	14HH 525 (M5)	25	7	1000/1400
				14HH 527 (M5)	27	7	1000/1400
Hex Face to Face (A/F 20mm)							
20HH 520 (M5)	20	5	800/1100	20HH 620 (M6)	20	5	800/1100
20HH 525 (M5)	25	7	1000/1400	20HH 625 (M6)	25	7	1000/1400
20HH 530 (M5)	30	7	1200/1600	20HH 630 (M6)	30	7	1200/1600
20HH 535 (M5)	35	9	1400/1900	20HH 635 (M6)	35	9	1400/1900
20HH 540 (M5)	40	12	1600/2200	20HH 640 (M6)	40	12	1600/2200
20HH 545 (M5)	45	12	1800/2500	20HH 645 (M6)	45	12	1800/2500
20HH 550 (M5)	50	12	2000/2800	20HH 650 (M6)	50	12	2000/2800
20HH 555 (M5)	55	12	2200/3000	20HH 655 (M6)	55	12	2200/3000
20HH 560 (M5)	60	12	2400/3300	20HH 660 (M6)	60	12	2400/3300
20HH 820 (M8)	20	5	800/1100	20HH 845 (M8)	45	12	1800/2500
20HH 825 (M8)	25	7	1000/1400	20HH 850 (M8)	50	17	2000/2800
20HH 830 (M8)	30	7	1200/1600	20HH 860 (M8)	60	17	2400/3300
20HH 835 (M8)	35	9	1400/1900				
Hex Face to Face (A/F 25mm)							
25HH 625 (M6)	25	7	1000/1400	25HH 825 (M8)	25	7	1000/1400
25HH 630 (M6)	30	7	1200/1600	25HH 830 (M8)	30	7	1200/1600
25HH 635 (M6)	35	9	1400/1900	25HH 835 (M8)	35	9	1400/1900
25HH 640 (M6)	40	12	1600/2200	25HH 840 (M8)	40	12	1600/2200
25HH 645 (M6)	45	12	1800/2500	25HH 845 (M8)	45	12	1800/2500
25HH 650 (M6)	50	12	2000/2800	25HH 850 (M8)	50	17	2000/2800
25HH 655 (M6)	55	12	2200/3000	25HH 855 (M8)	55	17	2200/3000
25HH 660 (M6)	60	12	2400/3300	25HH 860 (M8)	60	17	2400/3300
				25HH 1030 (M10)	30	9	1200/1600
Hex Face to Face (A/F 35mm)							
35HH 830 (M8)	30	9	1200/1600	35HH 1030 (M10)	30	9	1200/1600
35HH 835 (M8)	35	9	1400/1900	35HH 1035 (M10)	35	9	1400/1900
35HH 840 (M8)	40	12	1600/2200	35HH 1040 (M10)	40	12	1600/2200
35HH 845 (M8)	45	12	1800/2500	35HH 1045 (M10)	45	12	1800/2500
35HH 850 (M8)	50	17	2000/2800	35HH 1050 (M10)	50	17	2000/2800
35HH 855 (M8)	55	17	2200/3000	35HH 1055 (M10)	55	17	2200/3000
35HH 860 (M8)	60	17	2400/3300	35HH 1060 (M10)	60	17	2400/3300
Hex Face to Face (A/F 45mm)							
45HH 1035 (M10)	35	12	1400/1900	45HH 1235 (M12)	35	12	1400/1900
45HH 1040 (M10)	40	12	1600/2200	45HH 1240 (M12)	40	12	1600/2200
45HH 1045 (M10)	45	12	1800/2500	45HH 1245 (M12)	45	12	1800/2500
45HH 1050 (M10)	50	17	2000/2800	45HH 1250 (M12)	50	17	2000/2800
45HH 1055 (M10)	55	17	2200/3000	45HH 1255 (M12)	55	17	2200/3000
45HH 1060 (M10)	60	17	2400/3300	45HH 1260 (M12)	60	17	2400/3300
45HH 1070 (M10)	70	22	2800/3900	45HH 1270 (M12)	70	22	2800/3900
45HH 1080 (M10)	80	26	3200/4400	45HH 1280 (M12)	80	26	3200/4400
45HH 1090 (M10)	90	26	3600/5000	45HH 1290 (M12)	90	26	3600/5000
45HH 10100 (M10)	100	26	4000/5600	45HH 12100 (M12)	100	26	4000/5600
Hex Face to Face (A/F 55mm)							
55HH 1050 (M10)	50	17	2000/2800	55HH 1060 (M10)	60	17	2400/3300

- Material : DMC (Dough Moulding Compound) c UL us UL File No. QEUY2.E249670 (Halogen Free)
- Product : UL Certification File No. QEUY2.E314972
- All Dimensions are in MM
- TL : Effective Thread Length
- All Insulators are CE certified
- Insert : Aluminium / Brass / Steel (Zinc Passivated) / Stainless Steel
- Mounting Detail on Page No. 63
- Insert Material detail on page no. 66
- For maximum torque please see page no. 66

- For technical details of Busbar support & Insulator, please refer POWERMAT TECHNICAL NOTES - 01/15.
- For checking the suitability of a support & insulator for a fault current, please ask for POWERMAT FAULT LEVEL CALCULATOR Software.

Round Hex

Part No. (Insert)	Height (H) mm	TL (mm)	Nominal Voltage (AC / DC)	Part No. (Insert)	Height (H) mm	TL (mm)	Nominal Voltage (AC / DC)
Hex Face to Face (A/F 20mm)							
20RH 520 (M5)	20	5	800/1100	20RH 525 (M5)	25	7	1000/1400
20RH 620 (M6)	20	5	800/1100	20RH 830 (M8)	30	7	1200/1600
20RH 625 (M6)	25	7	1000/1400	20RH 835 (M8)	35	9	1400/1900
20RH 635 (M6)	35	9	1400/1900	20RH 840 (M8)	40	12	1600/2200
20RH 640 (M6)	40	12	1600/2200	20RH 845 (M8)	45	12	1800/2500
20RH 645 (M6)	45	12	1800/2500	20RH 850 (M8)	50	17	2000/2800
20RH 650 (M6)	50	12	2000/2800				
Hex Face to Face (A/F 30mm)							
30RH 830 (M8)	30	9	1200/1600	30RH 1030 (M10)	30	9	1200/1600
30RH 835 (M8)	35	9	1400/1900	30RH 1035 (M10)	35	9	1400/1900
30RH 840 (M8)	40	12	1600/2200	30RH 1040 (M10)	40	12	1600/2200
Hex Face to Face (A/F 40mm)							
40RH 1030 (M10)	30	9	1200/1600	40RH 1240 (M12)	40	12	1600/2200
40RH 1035 (M10)	35	9	1400/1900	40RH 1245 (M12)	45	12	1800/2500
40RH 1040 (M10)	40	12	1600/2200	40RH 1250 (M12)	50	17	2000/2800
40RH 1045 (M10)	45	12	1800/2500	40RH 1255 (M12)	55	17	2200/3000
40RH 1050 (M10)	50	17	2000/2800	40RH 1260 (M12)	60	17	2400/3300
40RH 1055 (M10)	55	17	2200/3000	40RH 1265 (M12)	65	17	2600/3600
40RH 1060 (M10)	60	17	2400/3300	40RH 1270 (M12)	70	26	2800/3900
40RH 1065 (M10)	65	17	2600/3600				
40RH 1070 (M10)	70	21	2800/3900				
Hex Face to Face (A/F 60mm)							
60RH 1040 (M10)	40	12	1600/2200	60RH 1240 (M12)	40	12	1600/2200
60RH 1050 (M10)	50	17	2000/2800	60RH 1250 (M12)	50	17	2000/2800
60RH 1070 (M10)	70	21	2800/3900	60RH 1260 (M12)	60	17	2400/3300
				60RH 1270 (M12)	70	21	2800/3900
60RH 1650 (M16)	50	17	2000/2800	60RH 1280 (M12)	80	26	3200/4400
60RH 1660 (M16)	60	17	2400/3300				
60RH 1670 (M16)	70	21	2800/3900				
60RH 1680 (M16)	80	26	3200/4400				

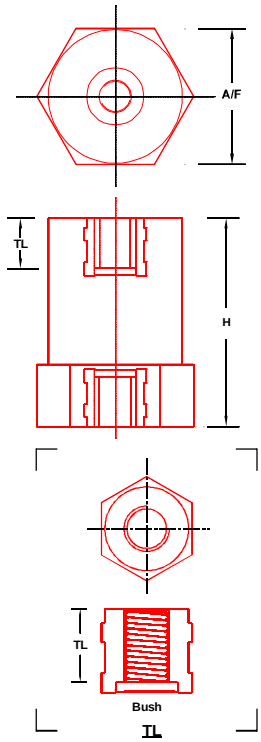

POWERMAT code	H (mm)	Dimension Insert I (2 nos.)	Insert II (1 no.)	Insert III (1 no.)	TL mm	Nominal Voltage (AC / DC)
PD60RH40	40	M8 x 15	M10 x 15	M12 x 15	12	1600/2200
PD60RH50	50	M8 x 20	M10 x 20	M12 x 20	17	2000/2800
PD60RH60	60	M8 x 20	M10 x 20	M12 x 25	21	2400/3300
PD60RH70	70	M8 x 20	M10 x 20	M12 X 25	21	2800/3900
PD60RH80	80	M8 x 20	M10 x 30	M12 x 30	26	3200/4400

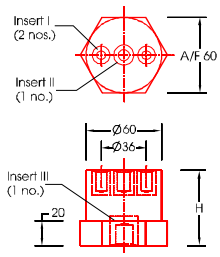

- Material : DMC (Dough Moulding Compound) c UL us UL File No. QEUY2.E249670 (Halogen Free)
- Product : UL Certification File No. QEUY2.E314972
- All Dimensions are in MM
- TL : Effective Thread Length
- All Insulators are CE certified

- Insert : Aluminium / Brass / Steel (Zinc Passivated) / Stainless Steel
- Mounting Detail on Page No. 63
- Insert Material detail on page no. 66
- For maximum torque please see page no. 66

- For technical details of Busbar support & Insulator, please refer POWERMAT TECHNICAL NOTES - 01/15.
- For checking the suitability of a support & insulator for a fault current, please ask for POWERMAT FAULT LEVEL CALCULATOR Software.

RH Series (Male - Male Combination)

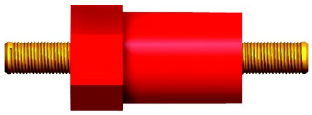

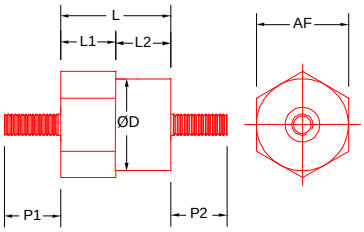

Part No.	AF mm	Ø D mm	L mm	L1 mm	L2 mm	P1 mm	P2 mm
Hex Face to Face (A/F 10mm)							
RH10.12-HM3.05RM3.05	10	10	12	6	6	M3X5	M3X5
RH11.11-HM3.10RM3.10	11	11	11	6	5	M3X10	M3X10
Hex Face to Face (A/F 14mm)							
RH14.14-HM3.10RM3.10	14	14	14	6	8	M3X10	M3X10
RH14.14-HM4.10RM3.10	14	14	14	6	8	M4X10	M3X10
RH14.14-HM4.10RM4.10	14	14	14	6	8	M4X10	M4X10
RH14.14-HM4.10RM6.10	14	14	14	6	8	M4X10	M6X10
RH14.14-HM5.10RM5.10	14	14	14	6	8	M5X10	M5X10
RH14.14-HM6.10RM6.10	14	14	14	6	8	M6X10	M6X10
RH14.14-HM6.10RM6.15	14	14	14	6	8	M6X10	M6X15
RH14.26-HM5.10RM5.10	14	14	26	8	18	M5X10	M5X10
Hex Face to Face (A/F 21mm)							
RH21.26-HM8.20RM8.08	21	20	26	8	18	M8X20	M8X08
RH21.35-HM8.10RM8.15	21	20	35	17	18	M8X10	M8X15

RH Series (Male - Female Combination)

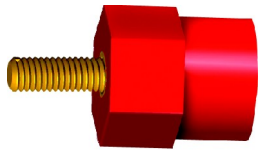

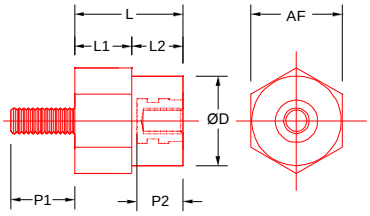

Part No.	AF mm	Ø D mm	L mm	L1 mm	L2 mm	P1 mm	P2 mm
Hex Face to Face (A/F 14mm)							
RH14.17-HM4.07RF4.07	14	14	17	9	8	M4X7	M4X7
RH14.17-HM4.10RF4.07	14	14	17	9	8	M4X10	M4X7
RH14.17-HM6.15RF6.07	14	14	17	9	8	M6X15	M6X7
RH14.17-HM5.07RF5.10	14	14	17	9	8	M5X7	M5X10
Hex Face to Face (A/F 21mm)							
RH21.26-HF8.08RM8.10	21	20	26	8	18	M8X8	M8X10

RH Series (Female - Female Combination)

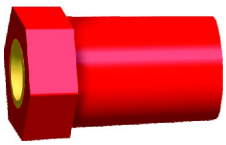

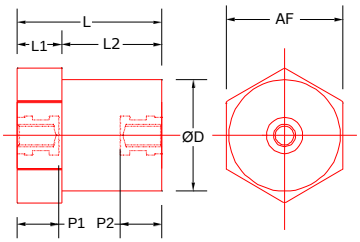

Part No.	AF mm	Ø D mm	L mm	L1 mm	L2 mm	P1 mm	P2 mm
Hex Face to Face (A/F 21mm)							
RH21.26-HF6.08RF6.08	21	20	26	8	18	M6X8	M6X8
RH21.26-HF8.08RF6.08	21	20	26	8	18	M8X8	M6X8
RH21.26-HF8.08RF8.08	21	20	26	8	18	M8X8	M8X8
RH21.35-HF6.08RF6.08	21	20	35	17	18	M6X8	M6X8
RH21.35-HF8.08RF8.08	21	20	35	17	18	M8X8	M8X8
RH21.35-HF8.10RF8.10	21	20	35	17	18	M8X8	M8X8

- Material : DMC (Dough Moulding Compound) c UL us UL File No. QEUY2.E249670 (Halogen Free)
- All Dimensions are in MM
- TL : Effective Thread Length
- All Insulators are CE certified
- Insert : Aluminium / Brass / Steel (Zinc Passivated) / Stainless Steel
- Mounting Detail on Page No. 63
- Insert Material detail on page no. 66
- For maximum torque please see page no. 66

- For technical details of Busbar support & Insulator, please refer POWERMAT TECHNICAL NOTES - 01/15.
- For checking the suitability of a support & insulator for a fault current, please ask for POWERMAT FAULT LEVEL CALCULATOR Software.

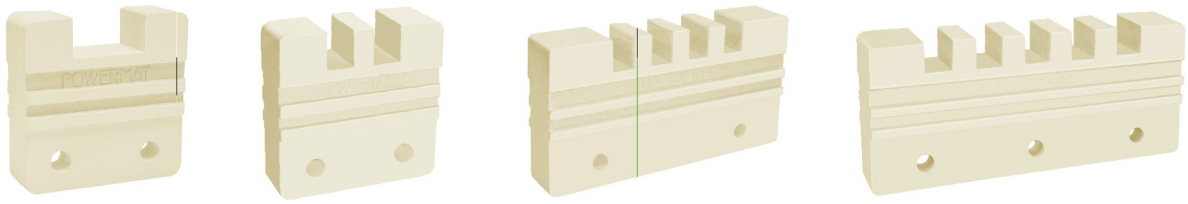

Finger- Supports

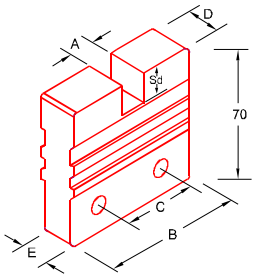

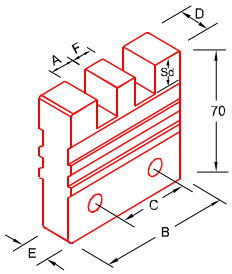

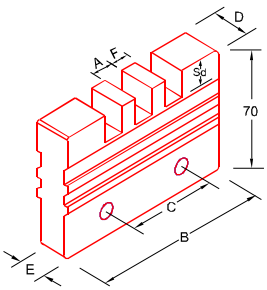

Busbar	POWERMAT code	Dimension						
		A max	B	C	D	E	F max	Sd
Single Way								
6mm x 1R	106S	7	50	22	14	10	-	15
10mm x 1R	110S	11	50	22	14	10	-	15
12mm x 1R	112S	13.7	50	22	14	10	-	15
6mm x 1R	106W	7	60	32	14	10	-	15
10mm x 1R	110W	11	60	32	14	10	-	15
12mm x 1R	112W	13.7	60	32	14	10	-	15
6mm x 1R	106K	7	70	40	20	16	-	15
10mm x 1R	110K	11	70	40	20	16	-	15
12mm x 1R	112K	13.7	70	40	20	16	-	15
6mm x 1R	106T	7	70	40	25	20	-	15
10mm x 1R	110T	11	70	40	25	20	-	15
12mm x 1R	112T	13.7	70	40	25	20	-	15
Two Way								
6mm x 2R	206W	7.1	60	32	14	10	5.6	15
10mm x 2R	210W	10.8	60	32	14	10	9.6	15
12mm x 2R	212W	13.7	60	32	14	10	11	15
6mm x 2R	206K	7.1	70	40	20	16	5.6	15
	119K	19.8	70	40	20	16	-	15
10mm x 2R	210K	10.8	70	40	20	16	9.6	15
	131K	31.2	70	40	20	16	-	15
12mm x 2R	212K	13.7	70	40	20	16	11	15
	137K	38.4	70	40	20	16	-	15
6mm x 2R	206T	7.1	70	40	25	20	5.6	15
	119T	19.8	70	40	25	20	-	15
10mm x 2R	210T	10.8	70	40	25	20	9.6	15
	131T	31.2	70	40	25	20	-	15
12mm x 2R	212T	13.7	70	40	25	20	11	15
	137T	38.4	70	40	25	20	-	15
Three Way								
6mm x 3R	306W	7	70	32	14	10	5.4	15
10mm x 3R	310W	11	80	50	14	10	9.4	15
12mm x 3R	312W	13.2	90	50	15	11	11.4	15
6mm x 3R	306K	7	70	40	20	16	5.4	15
10mm x 3R	310K	11	100	50	20	16	9.4	15
	151K	51.6	100	50	20	16	-	15
12mm x 3R	312K	13.2	100	50	20	16	11.4	15
6mm x 3R	306T	7	70	40	25	20	5.4	15
10mm x 3R	310T	11	100	50	25	20	9.4	15
	151T	51.6	100	50	25	20	-	15
12mm x 3R	312T	13.2	100	50	25	20	11.4	15

- Material : SMC (Sheet Moulding Compound) / DMC (Dough Moulding Compound) c UL us UL File No. QEUY2.E249670 (Halogen Free)
- All Dimensions are in MM
- Mounting Hole Ø 8.5 mm
- All Insulators are CE certified
- Sd - Depth of Slot
- Mounting Detail on Page No. 63

- For technical details of Busbar support & Insulator, please refer POWERMAT TECHNICAL NOTES - 01/15.
- For checking the suitability of a support & insulator for a fault current, please ask for POWERMAT FAULT LEVEL CALCULATOR Software.

Insulator for Vertical Bars

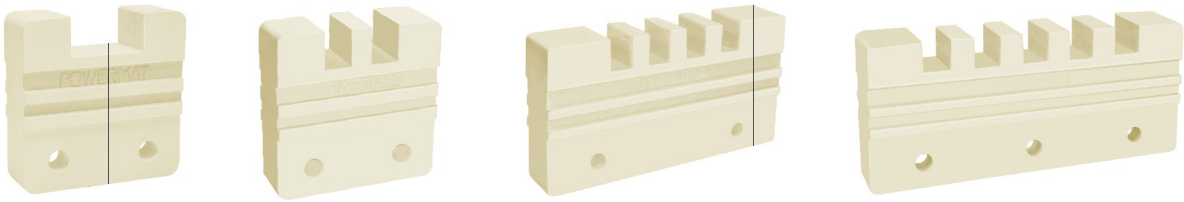

Finger- Supports

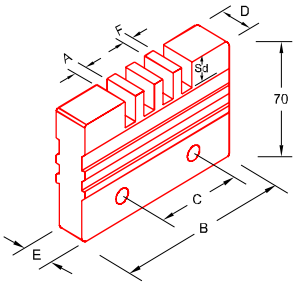

Busbar	POWERMAT code	Dimension A max	B	C	D	E	F max	Sd
Four Way								
6mm x 4R	406W	7.2	80	50	14	10	5.6	15
6mm x 4R	406K	7.2	100	50	20	16	5.6	15
10mm x 4R	410K	11.2	100	50	20	16	9.6	15
	172K	72	130	80	20	16	-	15
12mm x 4R	412K	13.4	130	80	20	16	11.6	15
10mm x 4R	410T	11.2	130	80	20	16	9.6	15
	172T	72	130	80	25	20	-	15
12mm x 4R	412T	13.4	130	80	25	20	11.6	15

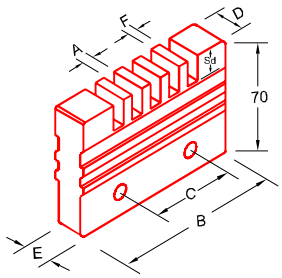

Five Way								
6mm x 5R	506K	7.4	100	50	20	16	5.4	15
10mm x 5R	510K	11.4	160	55/55	20	16	9.4	15
12mm x 5R	512K	13.7	160	55/55	20	16	11.4	15
6mm x 5R	506T	7.4	100	50	25	20	5.4	15
10mm x 5R	510T	11.4	160	55/55	25	20	9.4	15
12mm x 5R	512T	13.7	160	55/55	25	20	11.4	15

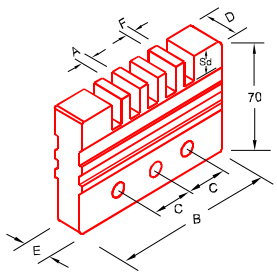

Six Way								
6mm x 6R	606K	7.6	100	50	20	16	5.6	15
10mm x 6R	610K	11.6	160	55/55	20	16	9.6	15
12mm x 6R	612K	13.9	160	55/55	20	16	11.6	15
6mm x 6R	606T	7.6	100	50	25	20	5.6	15
10mm x 6R	610T	11.6	160	55/55	25	20	9.6	15
12mm x 6R	612T	13.9	160	55/55	25	20	11.6	15

Eight Way								
6mm x 8R	806K	8	130	80	25	20	5.6	15

- Material : SMC (Sheet Moulding Compound) / DMC (Dough Moulding Compound) c UL us UL File No. QEUY2.E249670 (Halogen Free)
- All Dimensions are in MM
- Sd - Depth of Slot
- Mounting Hole Ø 8.5 mm
- Mounting Detail on Page No. 63
- All Insulators are CE certified
- For technical details of Busbar support & Insulator, please refer POWERMAT TECHNICAL NOTES - 01/15.
- For checking the suitability of a support & insulator for a fault current, please ask for POWERMAT FAULT LEVEL CALCULATOR Software.

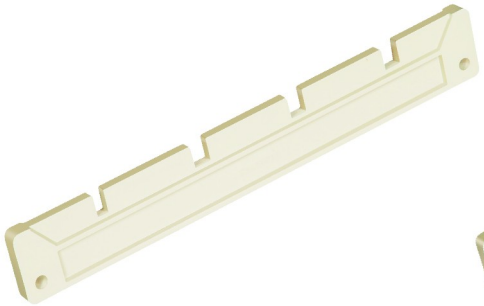

L- Supports

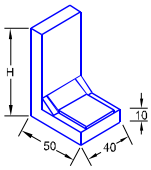

Height (H) mm	POWERMAT code
60	L 60
85	L 85
100	L 100
125	L 125

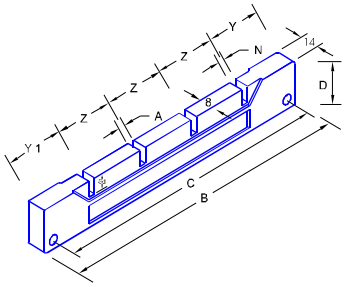

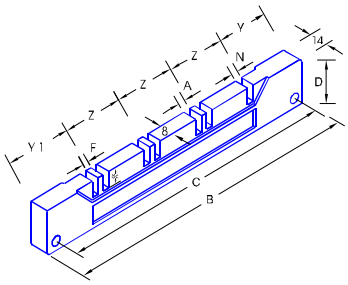

Busbar	POWERMAT code	Dimension									
		A	B	C	D	N	Z	Y1	Y	F	Sd
6mm x 1run/ph. & 6mm x 1 run/N	TPN 107/30	7	300	280	50	7	65	52.5	52.5	-	15
10mm x 1run/ph. & 6mm x 1 run/N	TPN 111/30	11	300	280	50	7	65	52.5	52.5	-	15
12mm x 1run/ph. & 6mm x 1 run/N	TPN 114/30	13.7	300	280	50	7	65	52.5	52.5	-	15
6mm x 1run/ph. & 6mm x 1 run/N	TPN 107/35	7	350	328	50	7	75	62.5	62.5	-	15
10mm x 1run/ph. & 6mm x 1 run/N	TPN 111/35	11	350	328	50	7	75	62.5	62.5	-	15
12mm x 1run/ph. & 6mm x 1 run/N	TPN 114/35	13.7	350	328	50	7	75	62.5	62.5	-	15
6mm x 1run/ph. & 6mm x 1 run/N	TPN 107/42	7	420	396	60	7	100	68	52	-	15
10mm x 1run/ph. & 6mm x 1 run/N	TPN 111/42	11	420	396	60	7	100	68	52	-	15
12mm x 1run/ph. & 6mm x 1 run/N	TPN 114/42	13.7	420	396	60	7	100	68	52	-	15
6mm x 1run/ph. & 6mm x 1 run/N	TPN 107/55	7	550	525	60	7	125	100	75	-	15
10mm x 1run/ph. & 6mm x 1 run/N	TPN 111/55	11	550	525	60	7	125	100	75	-	15
12mm x 1run/ph. & 6mm x 1 run/N	TPN 114/55	13.7	550	525	60	7	125	100	75	-	15
6mm x 2runs/ph. & 6mm x 1 run/N	TPN 207/35	7	350	328	50	7	70	78	62	5.8	15
10mm x 2runs/ph. & 10mm x 1 run/N	TPN 211/35	11	350	328	50	11	70	78	62	9	15
12mm x 2runs/ph. & 12mm x 1 run/N	TPN 214/35	13.7	350	328	50	13.7	70	78	62	11	15
6mm x 2runs/ph. & 6mm x 1 run/N	TPN 207/42	7	420	396	60	7	100	68	52	5.8	15
10mm x 2runs/ph. & 10mm x 1 run/N	TPN 211/42	11	420	396	60	11	100	68	52	9	15
12mm x 2runs/ph. & 12mm x 1 run/N	TPN 214/42	13.7	420	396	60	13.7	100	68	52	11	15
6mm x 2runs/ph. & 6mm x 1 run/N	TPN 207/55	7	550	525	60	7	125	100	75	5.8	15
10mm x 2runs/ph. & 10mm x 1 run/N	TPN 211/55	11	550	525	60	11	125	100	75	9	15
12mm x 2runs/ph. & 12mm x 1 run/N	TPN 214/55	13.7	550	525	60	13.7	125	100	75	11	15
6mm x 3 runs/ph.	TP 306/35	6	350	328	50	-	100	75	75	4.5	15
10mm x 2 runs/ph.	TP 211/35	11	350	328	50	-	100	75	75	9	15

- Material : SMC (Sheet Moulding Compound) / DMC (Dough Moulding Compound) UL File No. QEUY2.E249670 (Halogen Free)
- All Dimensions are in MM
- Sd - Depth of Slot
- All Insulators are CE certified
- Mounting Detail on Page No. 66
- For technical details of Busbar support & Insulator, please refer POWERMAT TECHNICAL NOTES - 01/15.
- For checking the suitability of a support & insulator for a fault current, please ask for POWERMAT FAULT LEVEL CALCULATOR Software.

Insulator for Vertical Bars

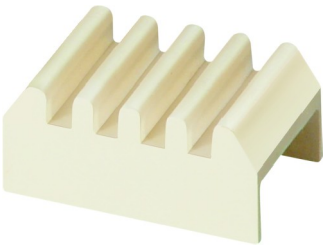

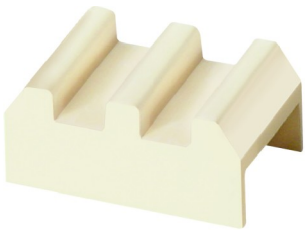

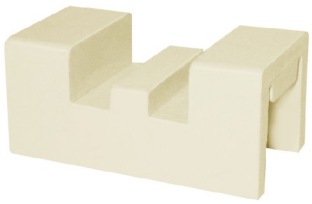

GP Series

Part No.	Busbar	Amax mm	C mm	F mm	G mm	H mm	L mm	H1 mm
GP - 106	6mm x 1R	7	20	-	38	30	47	12.5
GP - 110	10mm x 1R	11	20	-	38	30	47	12.5
GP - 206	6mm x 2R	7	25	5.5	38	30	52	12.5
GP - 210	10mm x 2R	11	30	9	38	30	67	12.5
GP - 306	6mm x 3R	8.5	30	5	38	30	61	12.5
GP - 406	6mm x 4R	8.5	50	5	38	30	80	12.5

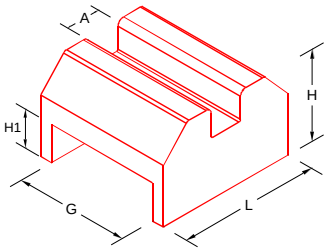

1 Way

GPS Series

Part No.	Busbar	Amax mm	C mm	F mm	G mm	H mm	L mm	H1 mm
GPS - 210	10mm x 2R	11	19	9	31	26.5	56	12.5
GPS - 212	12mm x 2R	12	19	8	31	30	56	12.5
GPS - 405	5mm x 4R	5.1	19	4.7	31	26.5	56	12.5
GPS - 406	6mm x 4R	7	19	5	31	30	67	12.5

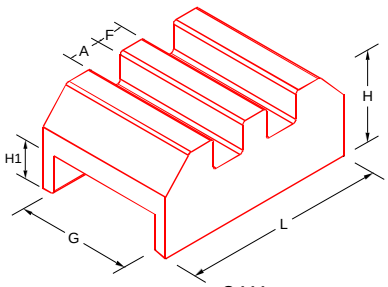

2 Way

GPB Series

Part No.	Busbar	Amax mm	C mm	F mm	G mm	H mm	L mm	H1 mm
GPB - 2498*	6mm x 2R	6	-	6	26	31	55	8
GPB - 2499*	10mm x 2R	10.3	-	9.9	26	31	64	8

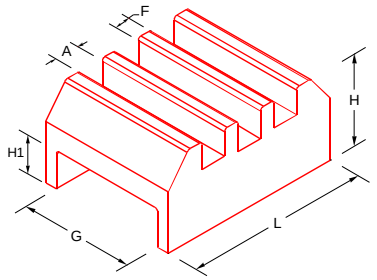

3 Way

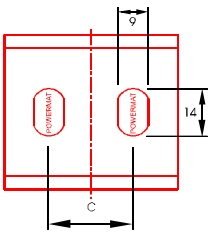

Bottom Side
GP Series

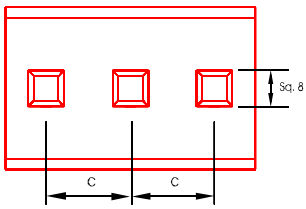

Bottom Side
GPS Series

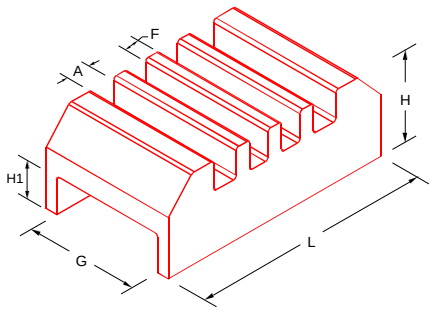

4 Way

- Material : SMC (Sheet Moulding Compound) / DMC (Dough Moulding Compound) UL File No. QEUY2.E249670 (Halogen Free)
- All Dimensions are in MM
- Mounting Detail on Page No. 64
- All Insulators are CE certified

- For technical details of Busbar support & Insulator, please refer POWERMAT TECHNICAL NOTES - 01/15.
- For checking the suitability of a support & insulator for a fault current, please ask for POWERMAT FAULT LEVEL CALCULATOR Software.

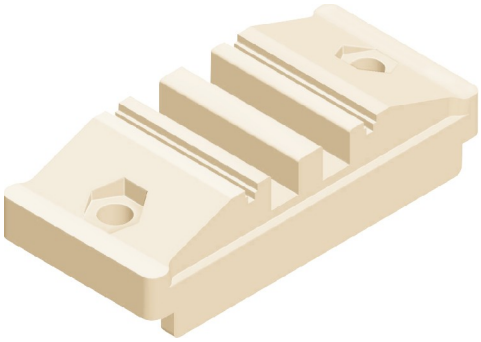

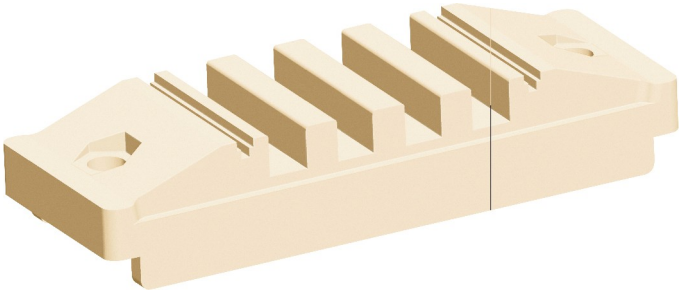

Busbar Details	POWERMAT Code	Dimensions L mm	Cd mm	A mm	F mm	Sd mm
10mm x 2 run	132GP 210	132	100	10.8	9.6	12
12mm x 2 run	132GP 212	132	100	13.7	11	12
6mm x 3 run	132GP 306	132	100	7	5.4	12
10mm x 3 run	172GP 310	172	140	11	9.4	12
12mm x 3 run	172GP 312	172	140	13.2	11.4	12
10mm x 4 run	172GP 410	172	140	11.2	9.6	12
6mm x 5 run	172GP 506	172	140	7.4	5	12

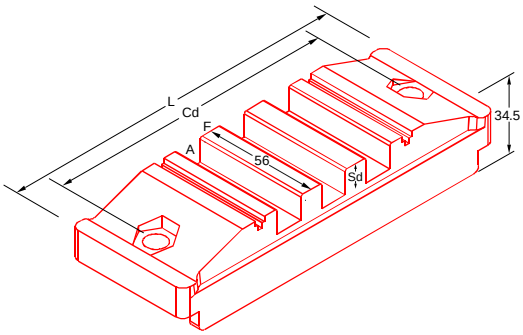

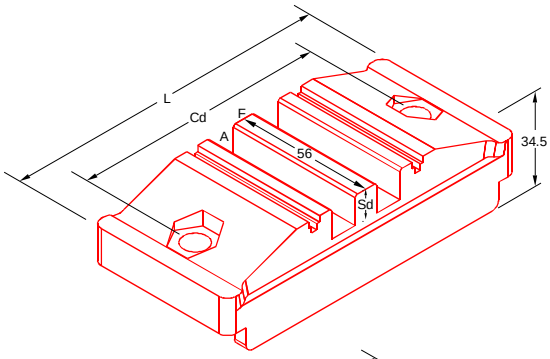

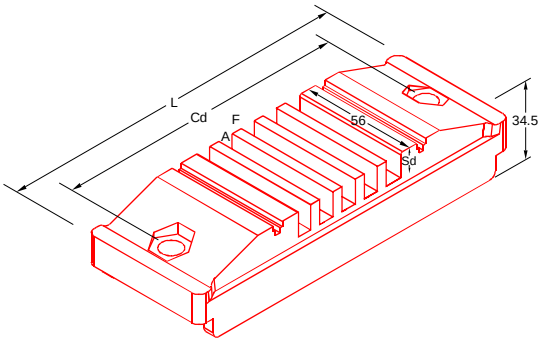

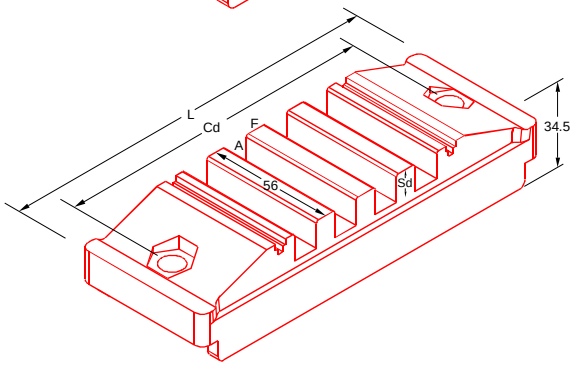

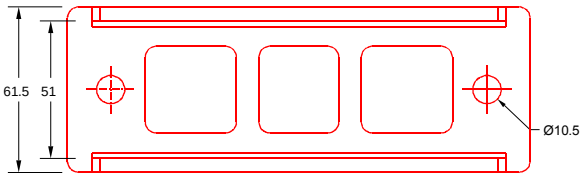

Bottom View of 132 & 172 Series

- Material : SMC (Sheet Moulding Compound) / DMC (Dough Moulding Compound) c UL us UL File No. QEUY2.E249670 (Halogen Free)
- All Dimensions are in MM
- Mounting Detail on Page No. 65
- All Insulators are CE certified
- For technical details of Busbar support & Insulator, please refer POWERMAT TECHNICAL NOTES - 01/15.
- For checking the suitability of a support & insulator for a fault current, please ask for POWERMAT FAULT LEVEL CALCULATOR Software.

Insulator for Vertical / Horizontal Bars

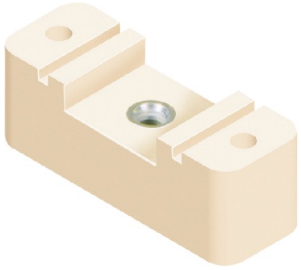

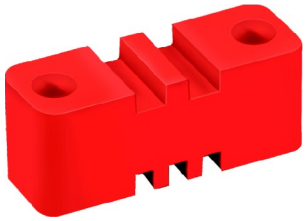

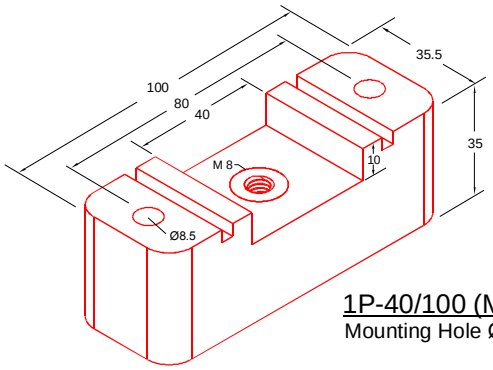

1P-40/100 (M 8)
Mounting Hole Ø8.5

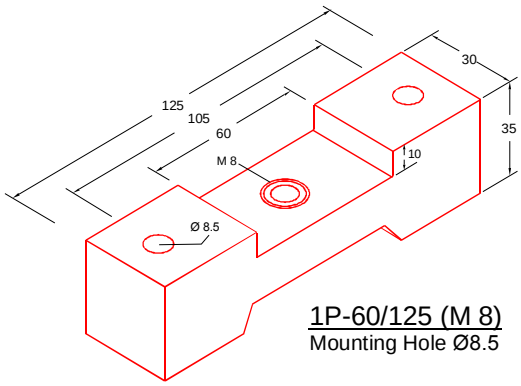

1P-60/125 (M 8)
Mounting Hole Ø8.5

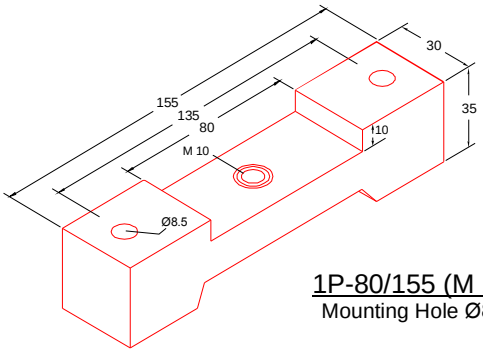

1P-80/155 (M 10)
Mounting Hole Ø8.5

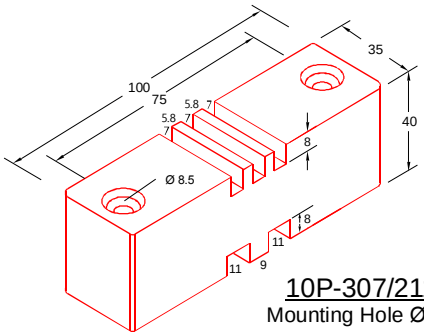

10P-307/211
Mounting Hole Ø8.5

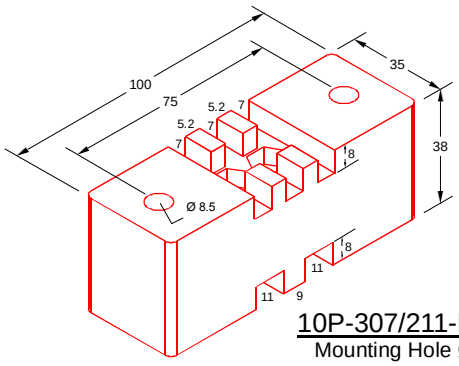

10P-307/211-H206
Mounting Hole Ø8.5

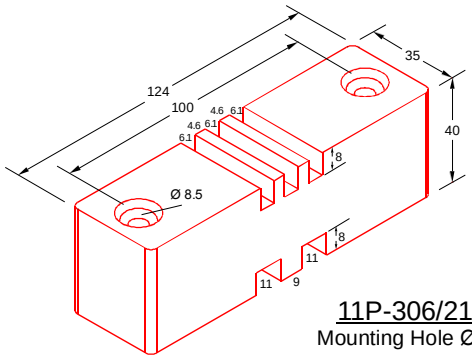

11P-306/211
Mounting Hole Ø8.5

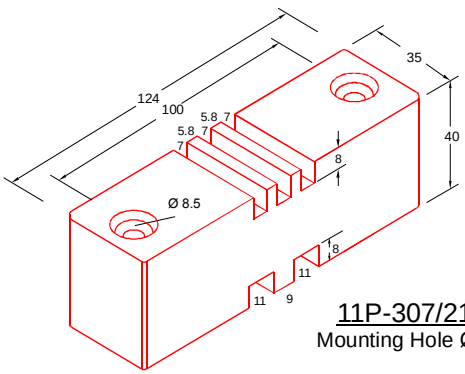

11P-307/211
Mounting Hole Ø8.5

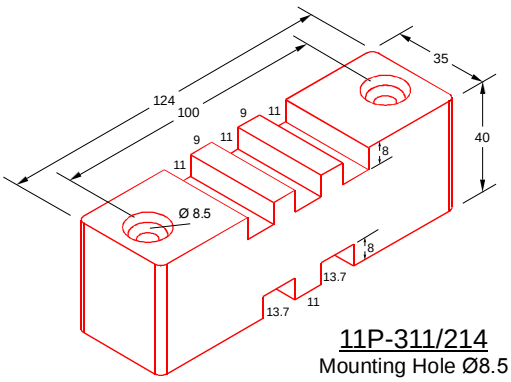

11P-311/214
Mounting Hole Ø8.5

- Material : SMC (Sheet Moulding Compound) / DMC (Dough Moulding Compound) c UL us UL File No. QEUY2.E249670 (Halogen Free)
- All Dimensions are in MM
- Mounting Detail on Page No. 66
- All Insulators are CE certified
- For technical details of Busbar support & Insulator, please refer POWERMAT TECHNICAL NOTES - 01/15.
- For checking the suitability of a support & insulator for a fault current, please ask for POWERMAT FAULT LEVEL CALCULATOR Software.

Insulator for Vertical / Horizontal Bars

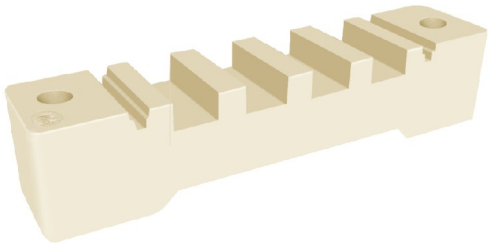

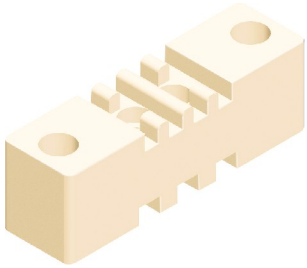

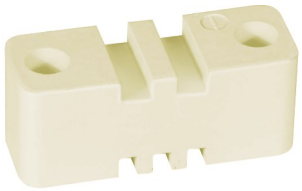

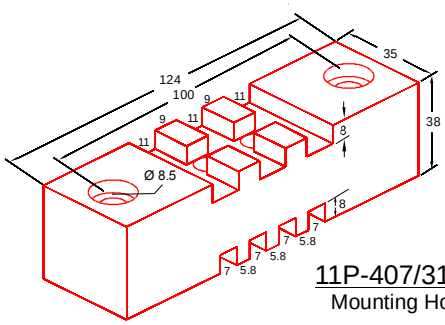

11P-407/311-H208
Mounting Hole Ø8.5

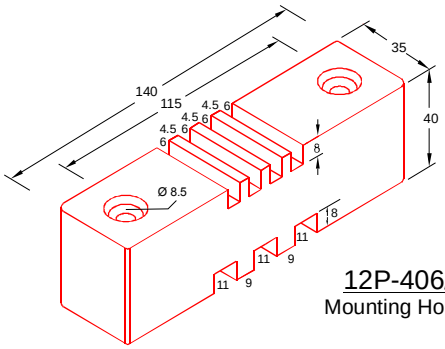

12P-406/311
Mounting Hole Ø8.5

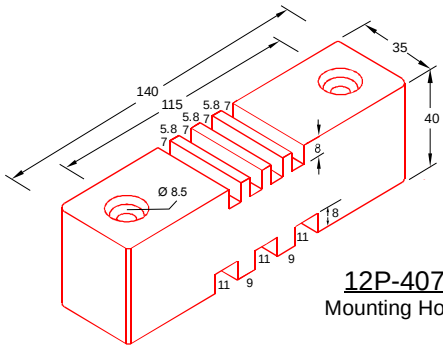

12P-407/311
Mounting Hole Ø8.5

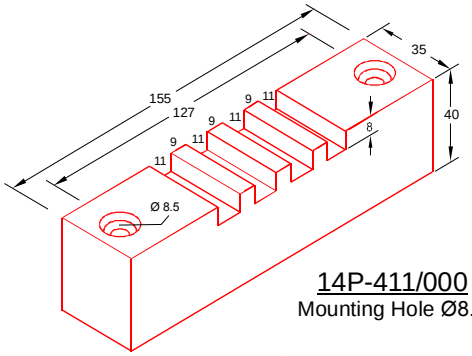

14P-411/000
Mounting Hole Ø8.5

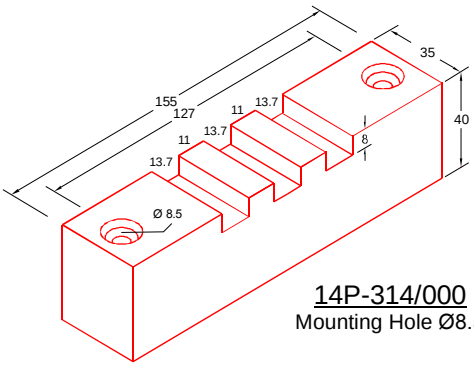

14P-314/000
Mounting Hole Ø8.5

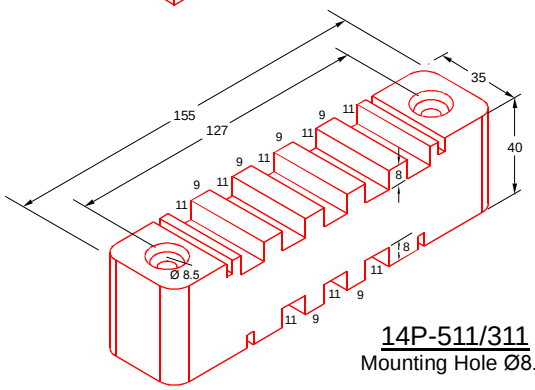

14P-511/311
Mounting Hole Ø8.5

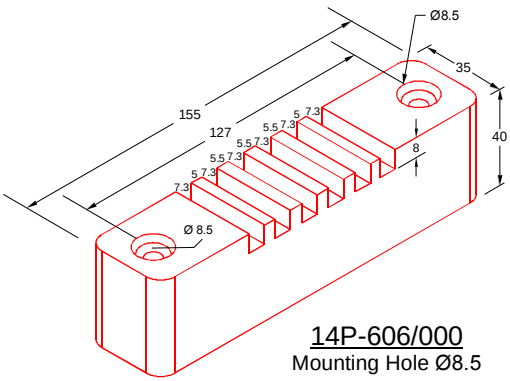

14P-606/000
Mounting Hole Ø8.5

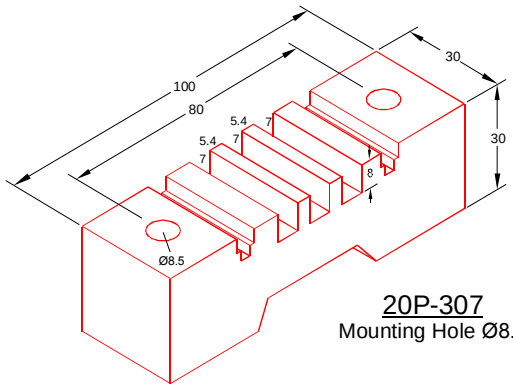

20P-307
Mounting Hole Ø8.5

- Material : SMC (Sheet Moulding Compound) / DMC (Dough Moulding Compound) c UL us UL File No. QEUY2.E249670 (Halogen Free)
- All Dimensions are in MM
- C-C (Ph)=Centre to Centre Between Phases
- All Insulators are CE certified
- Mounting Detail on Page No. 66
- For technical details of Busbar support & Insulator, please refer POWERMAT TECHNICAL NOTES - 01/15.
- For checking the suitability of a support & insulator for a fault current, please ask for POWERMAT FAULT LEVEL CALCULATOR Software.

Insulator for Vertical / Horizontal Bars

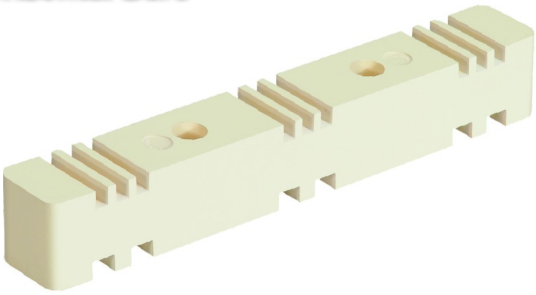

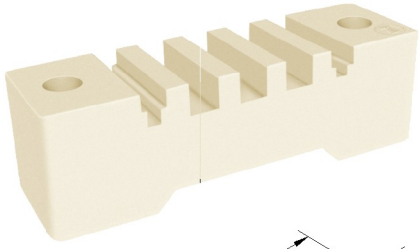

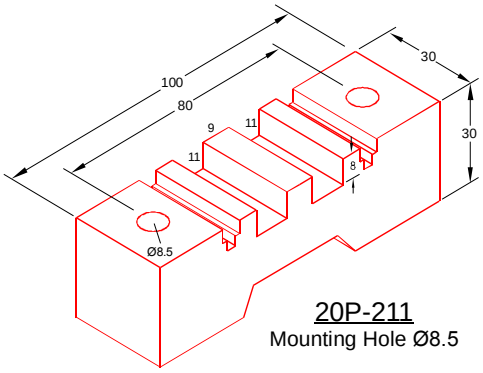

20P-211
Mounting Hole Ø8.5

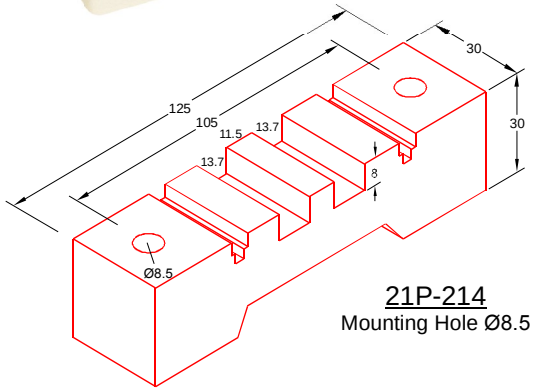

21P-214
Mounting Hole Ø8.5

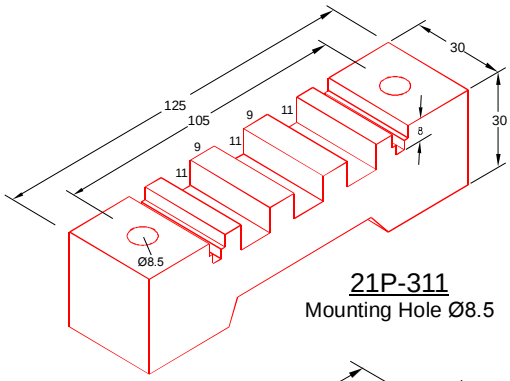

21P-311
Mounting Hole Ø8.5

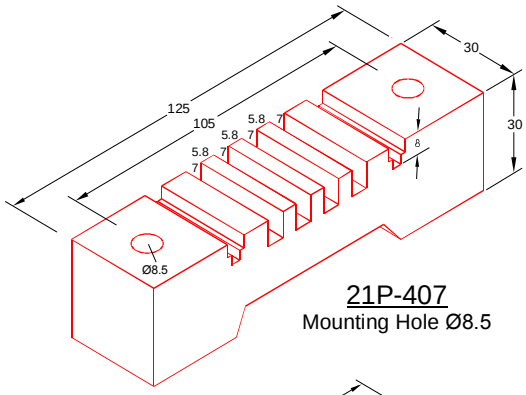

21P-407
Mounting Hole Ø8.5

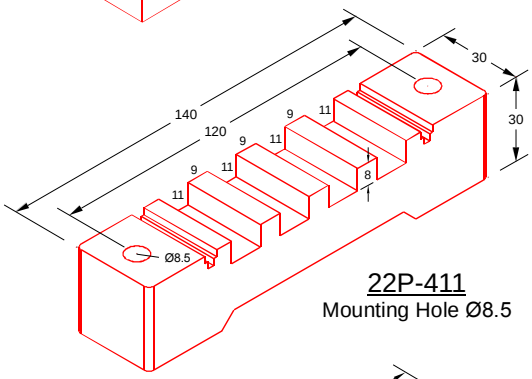

22P-411
Mounting Hole Ø8.5

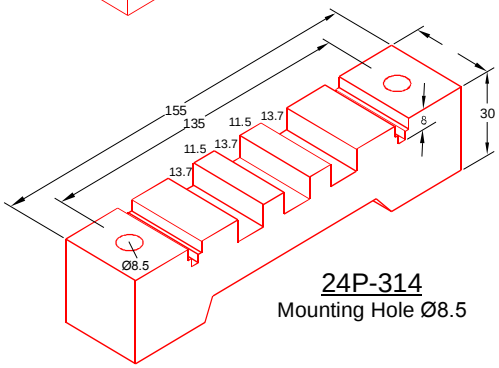

24P-314
Mounting Hole Ø8.5

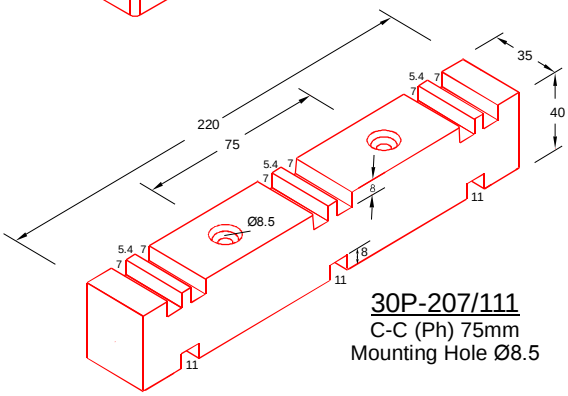

30P-207/111
C-C (Ph) 75mm
Mounting Hole Ø8.5

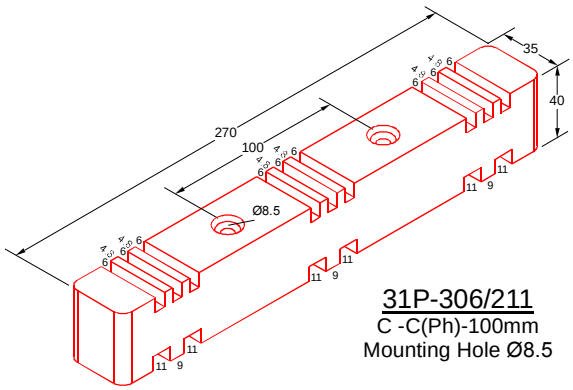

31P-306/211
C -C(Ph)-100mm
Mounting Hole Ø8.5

- Material : SMC (Sheet Moulding Compound) / DMC (Dough Moulding Compound) c UL us UL File No. QEUY2.E249670 (Halogen Free)
- All Dimensions are in MM
- Mounting Detail on Page No. 66
- All Insulators are CE certified
- For technical details of Busbar support & Insulator, please refer POWERMAT TECHNICAL NOTES - 01/15.
- For checking the suitability of a support & insulator for a fault current, please ask for POWERMAT FAULT LEVEL CALCULATOR Software.

Insulator for Vertical / Horizontal Bars

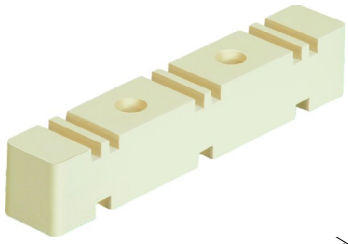

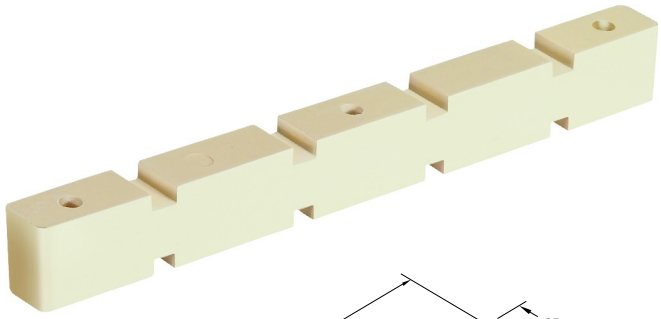

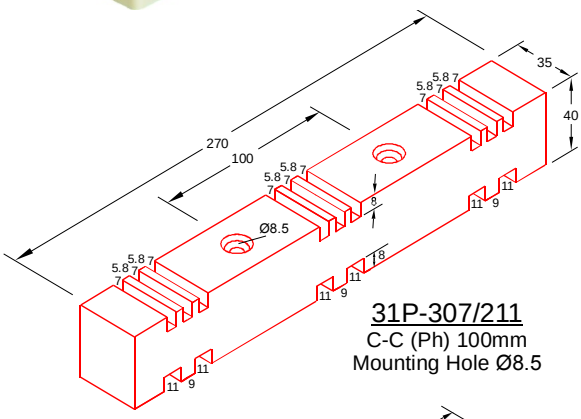

31P-307/211
C-C (Ph) 100mm
Mounting Hole Ø8.5

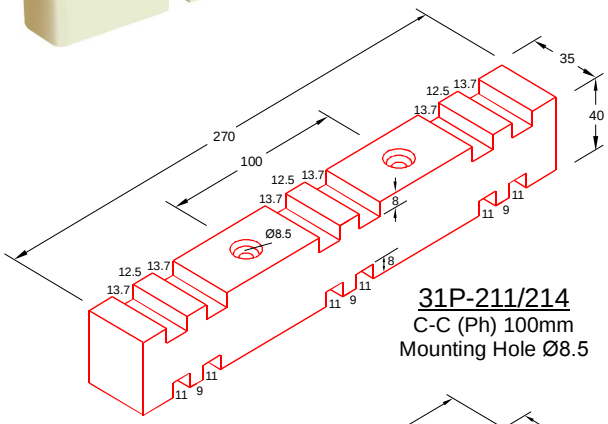

31P-211/214
C-C (Ph) 100mm
Mounting Hole Ø8.5

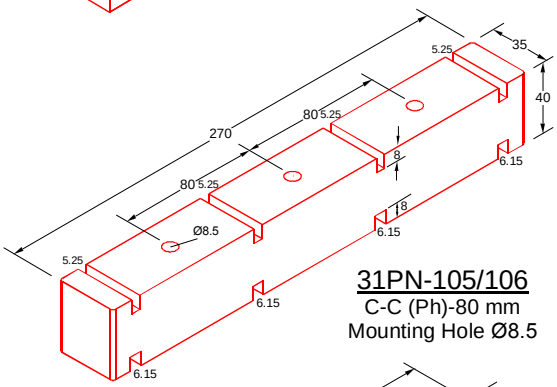

31PN-105/106
C-C (Ph)-80 mm
Mounting Hole Ø8.5

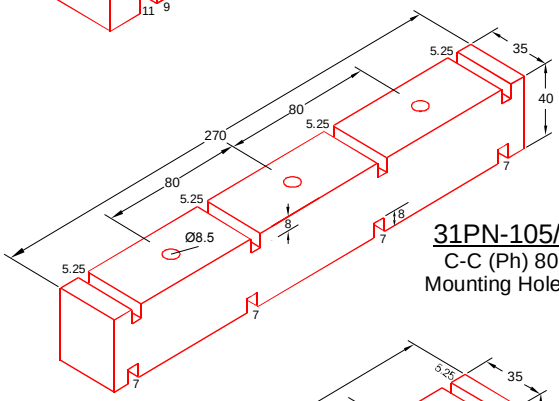

31PN-105/107
C-C (Ph) 80mm
Mounting Hole Ø8.5

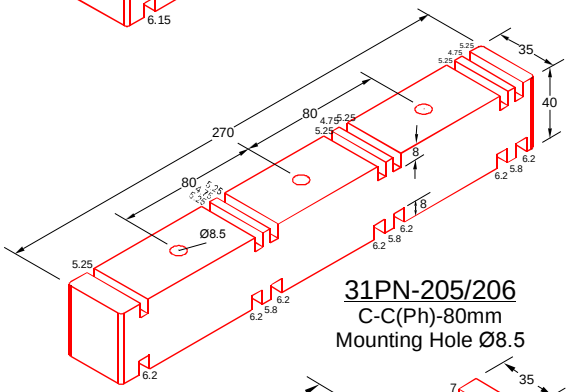

31PN-205/206
C-C(Ph)-80mm
Mounting Hole Ø8.5

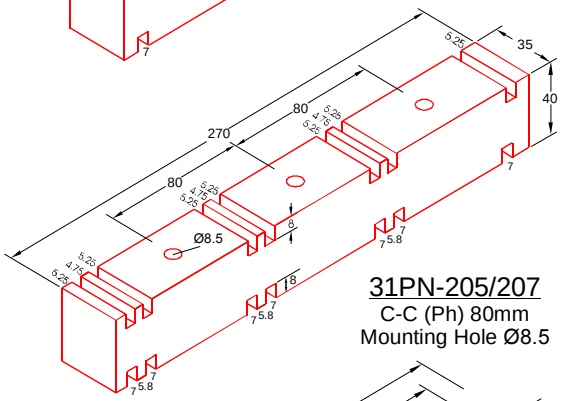

31PN-205/207
C-C (Ph) 80mm
Mounting Hole Ø8.5

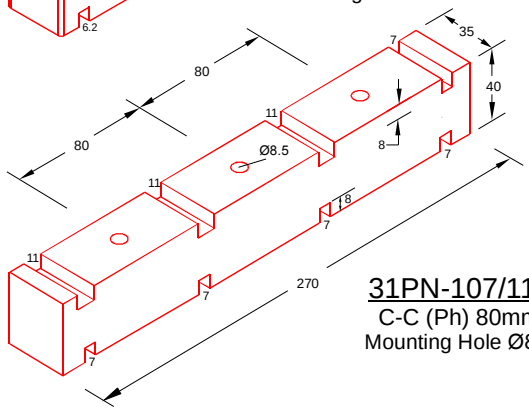

31PN-107/111
C-C (Ph) 80mm
Mounting Hole Ø8.5

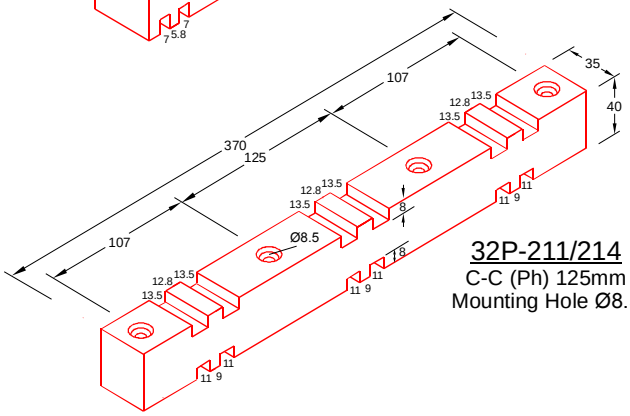

32P-211/214
C-C (Ph) 125mm
Mounting Hole Ø8.5

- Material : SMC (Sheet Moulding Compound) / DMC (Dough Moulding Compound) c UL us UL File No. QEUY2.E249670 (Halogen Free)
- All Dimensions are in MM
- C-C (Ph)=Centre to Centre Between Phases
- Mounting Detail on Page No. 66
- All Insulators are CE certified
- For technical details of Busbar support & Insulator, please refer POWERMAT TECHNICAL NOTES - 01/15.
- For checking the suitability of a support & insulator for a fault current, please ask for POWERMAT FAULT LEVEL CALCULATOR Software.

Insulator for Vertical / Horizontal Bars

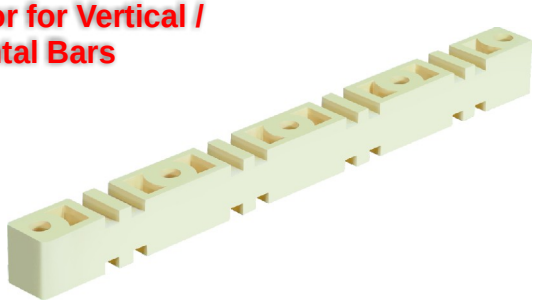

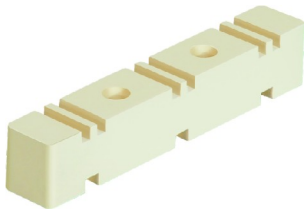

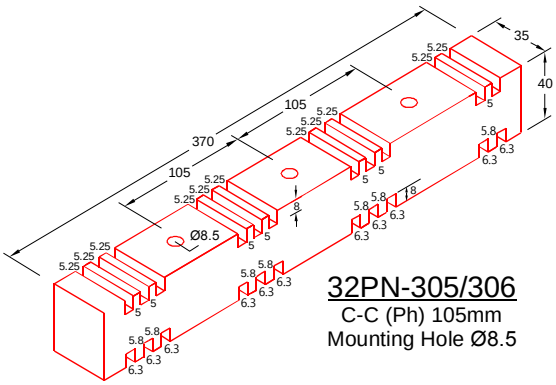

32PN-305/306
C-C (Ph) 105mm
Mounting Hole Ø8.5

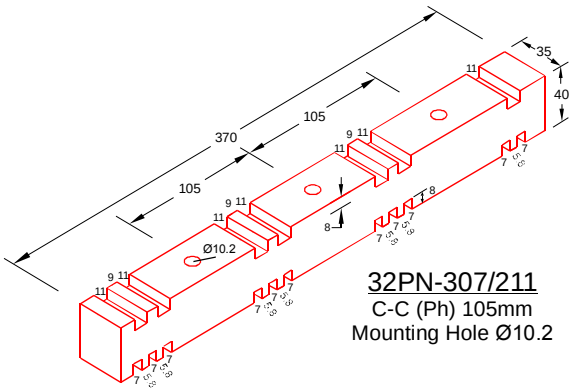

32PN-307/211
C-C (Ph) 105mm
Mounting Hole Ø10.2

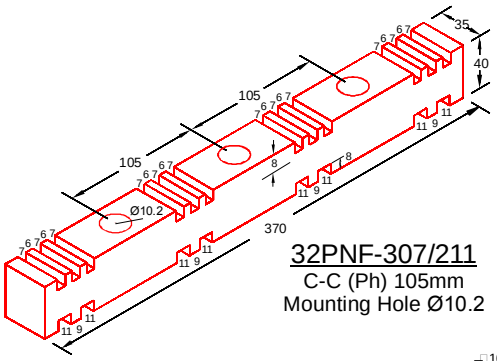

32PNF-307/211
C-C (Ph) 105mm
Mounting Hole Ø10.2

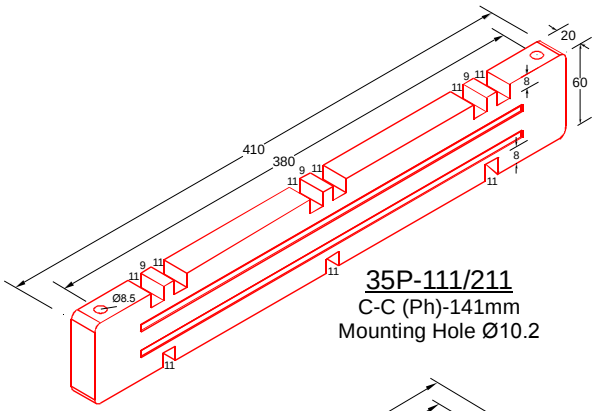

35P-111/211
C-C (Ph)-141mm
Mounting Hole Ø10.2

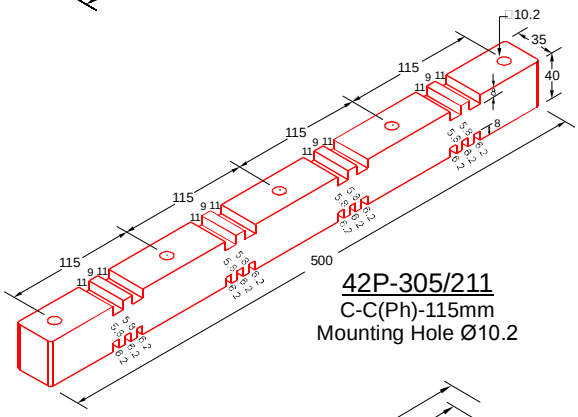

42P-305/211
C-C(Ph)-115mm
Mounting Hole Ø10.2

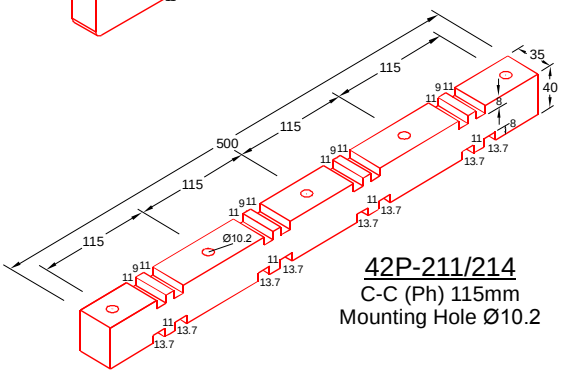

42P-211/214
C-C (Ph) 115mm
Mounting Hole Ø10.2

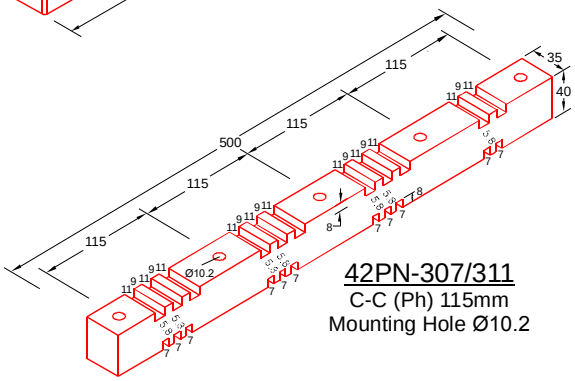

42PN-307/311
C-C (Ph) 115mm
Mounting Hole Ø10.2

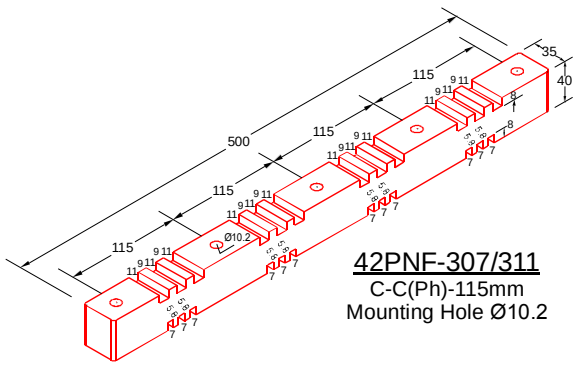

42PNF-307/311
C-C(Ph)-115mm
Mounting Hole Ø10.2

- Material : SMC (Sheet Moulding Compound) / DMC (Dough Moulding Compound) UL File No. QEUY2.E249670 (Halogen Free)
- All Dimensions are in MM
- C-C (Ph)=Centre to Centre Between Phases
- Mounting Detail on Page No. 66
- All Insulators are CE certified

- For technical details of Busbar support & Insulator, please refer POWERMAT TECHNICAL NOTES - 01/15.
- For checking the suitability of a support & insulator for a fault current, please ask for POWERMAT FAULT LEVEL CALCULATOR Software.

Insulator for Vertical / Horizontal Bars

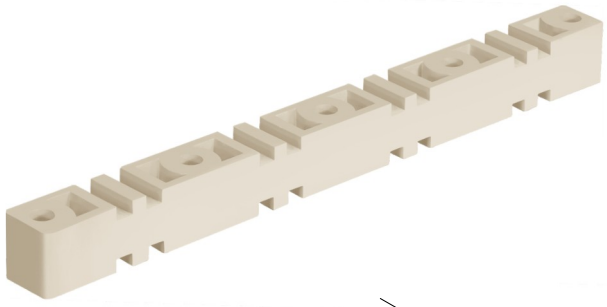

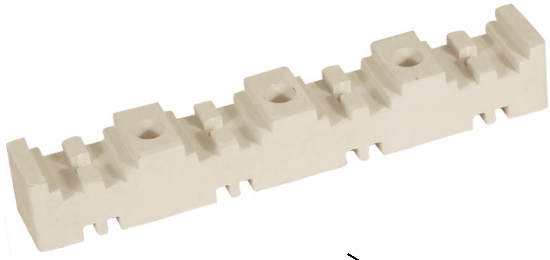

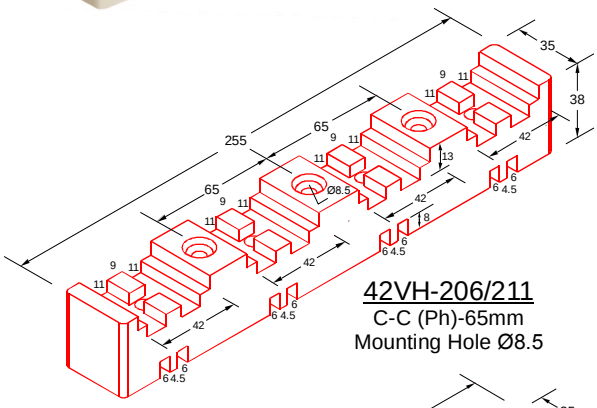

42VH-206/211
C-C (Ph)-65mm
Mounting Hole Ø8.5

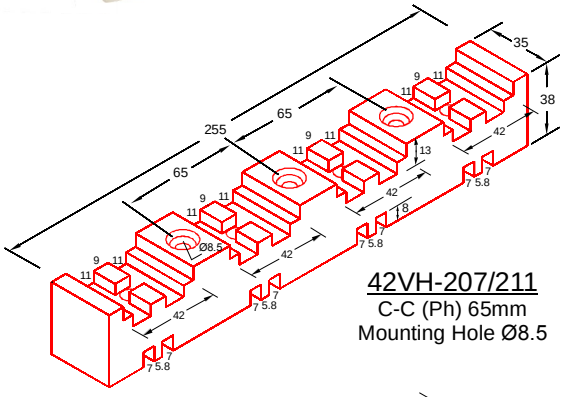

42VH-207/211
C-C (Ph) 65mm
Mounting Hole Ø8.5

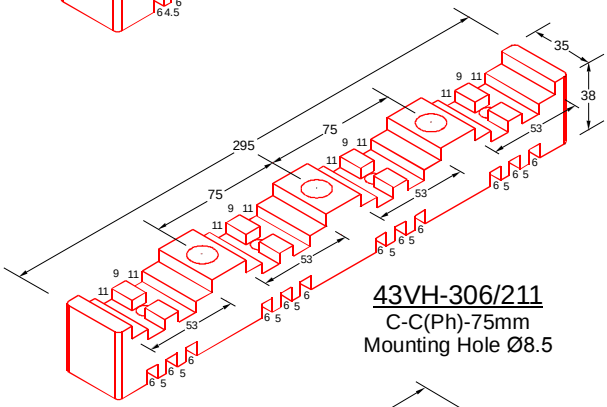

43VH-306/211
C-C(Ph)-75mm
Mounting Hole Ø8.5

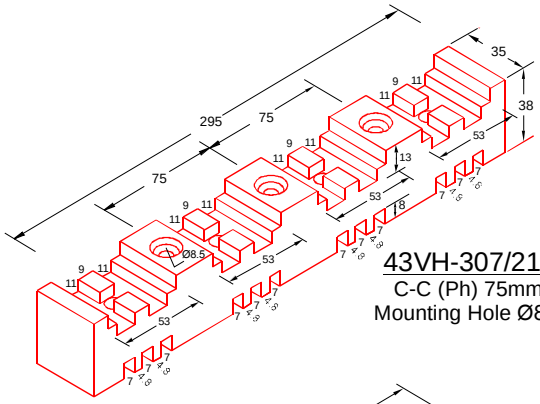

43VH-307/211
C-C (Ph) 75mm
Mounting Hole Ø8.5

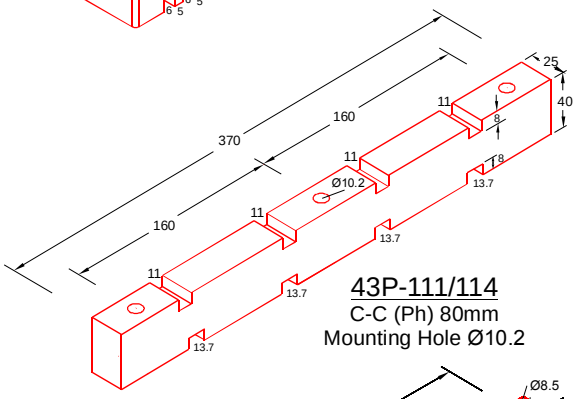

43P-111/114
C-C (Ph) 80mm
Mounting Hole Ø10.2

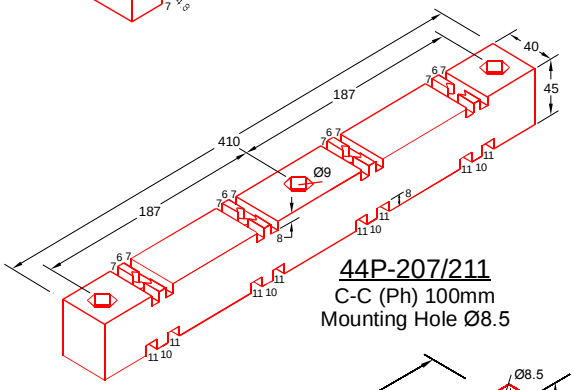

44P-207/211
C-C (Ph) 100mm
Mounting Hole Ø8.5

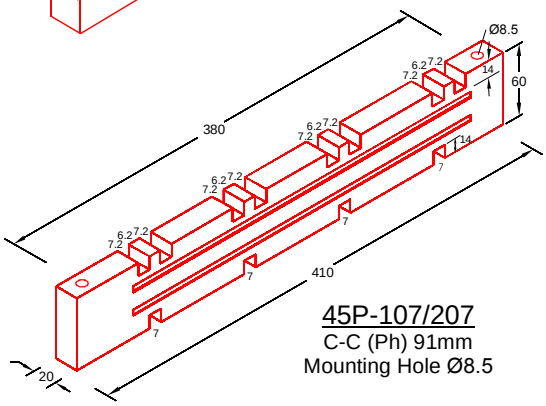

45P-107/207
C-C (Ph) 91mm
Mounting Hole Ø8.5

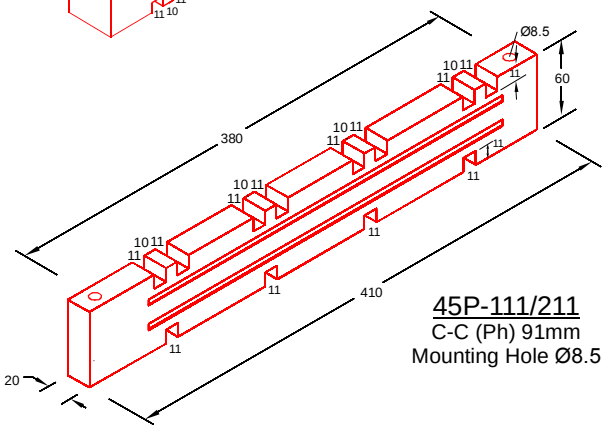

45P-111/211
C-C (Ph) 91mm
Mounting Hole Ø8.5

- Material : SMC (Sheet Moulding Compound) / DMC (Dough Moulding Compound) UL File No. QEUY2.E249670 (Halogen Free)
- All Dimensions are in MM
- C-C (Ph)=Centre to Centre Between Phases
- Mounting Detail on Page No. 66
- All Insulators are CE certified
- For technical details of Busbar support & Insulator, please refer POWERMAT TECHNICAL NOTES - 01/15.
- For checking the suitability of a support & insulator for a fault current, please ask for POWERMAT FAULT LEVEL CALCULATOR Software.

Insulator for Vertical / Horizontal Bars

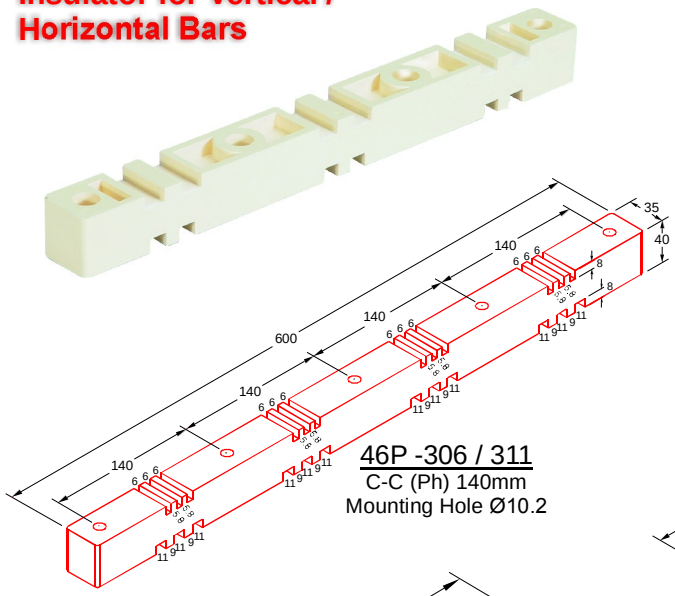

46P -306 / 311
C-C (Ph) 140mm
Mounting Hole Ø10.2

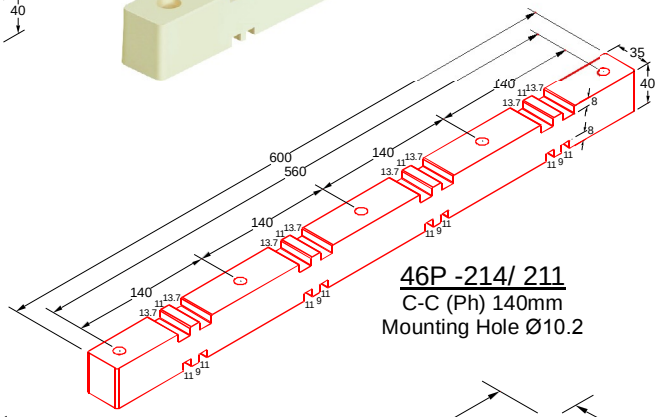

46P -214/ 211
C-C (Ph) 140mm
Mounting Hole Ø10.2

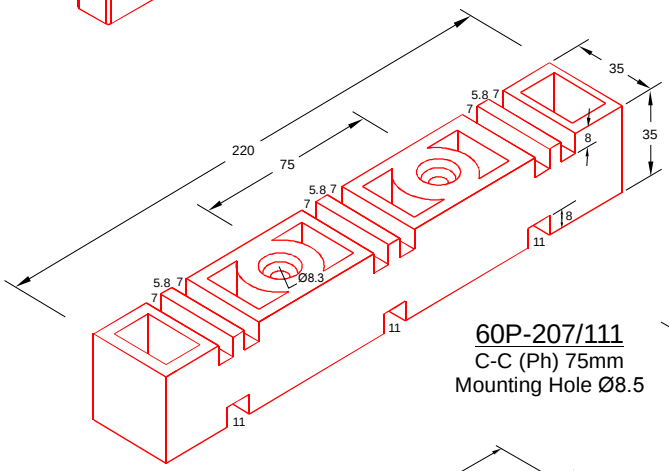

60P-207/111
C-C (Ph) 75mm
Mounting Hole Ø8.5

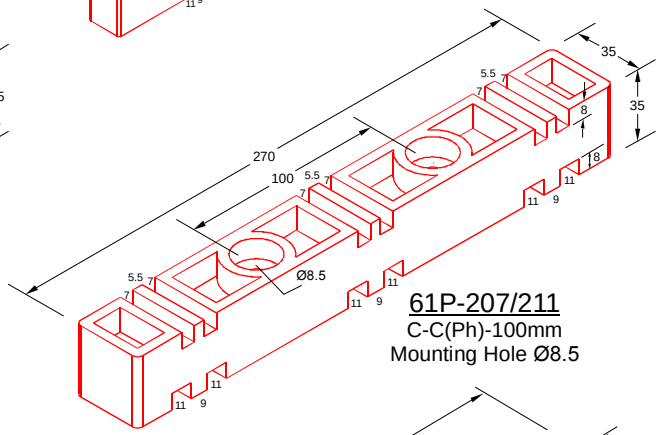

61P-207/211
C-C(Ph)-100mm
Mounting Hole Ø8.5

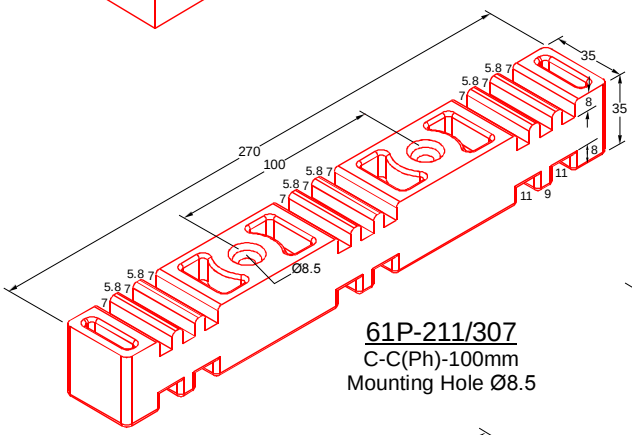

61P-211/307
C-C(Ph)-100mm
Mounting Hole Ø8.5

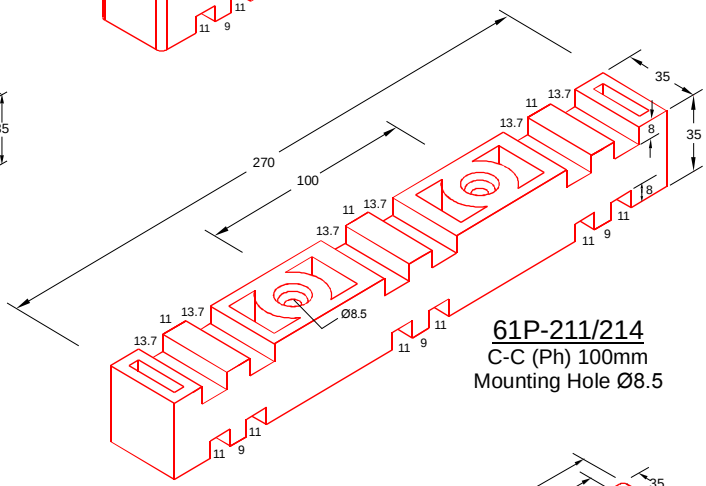

61P-211/214
C-C (Ph) 100mm
Mounting Hole Ø8.5

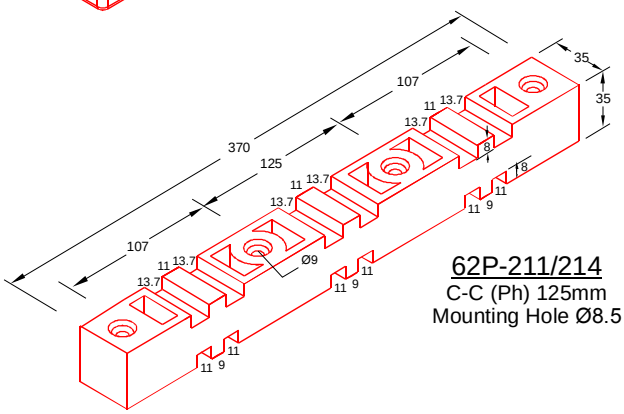

62P-211/214
C-C (Ph) 125mm
Mounting Hole Ø8.5

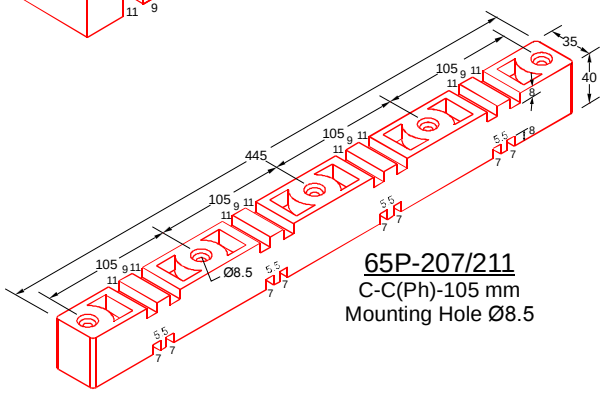

65P-207/211
C-C(Ph)-105 mm
Mounting Hole Ø8.5

- Material : SMC (Sheet Moulding Compound) / DMC (Dough Moulding Compound) UL File No. QEUY2.E249670 (Halogen Free)
- All Dimensions are in MM
- C-C (Ph)=Centre to Centre Between Phases
- Mounting Detail on Page No. 66
- All Insulators are CE certified
- For technical details of Busbar support & Insulator, please refer POWERMAT TECHNICAL NOTES - 01/15.
- For checking the suitability of a support & insulator for a fault current, please ask for POWERMAT FAULT LEVEL CALCULATOR Software.

Insulator for Vertical / Horizontal Bars

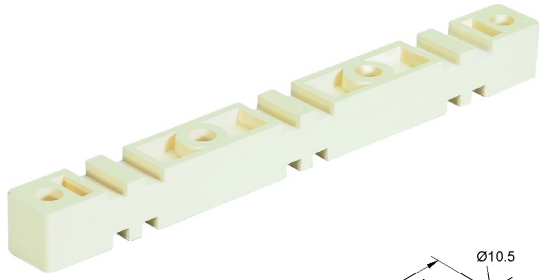

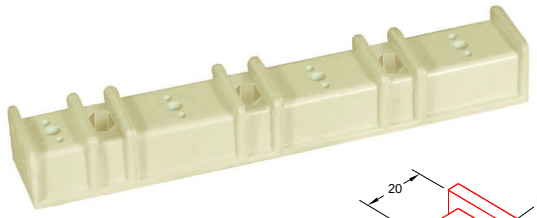

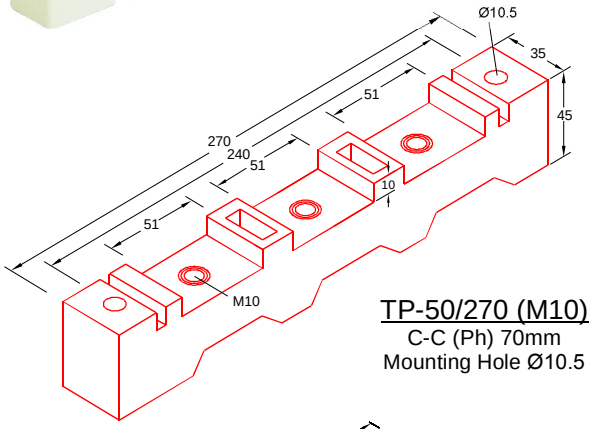

TP-50/270 (M10)
C-C (Ph) 70mm
Mounting Hole Ø10.5

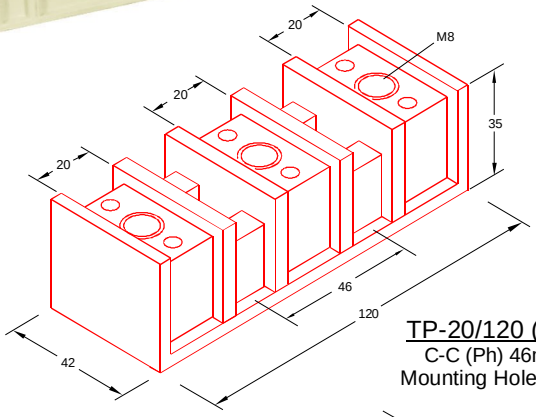

TP-20/120 (M8)
C-C (Ph) 46mm
Mounting Hole Ø6.3

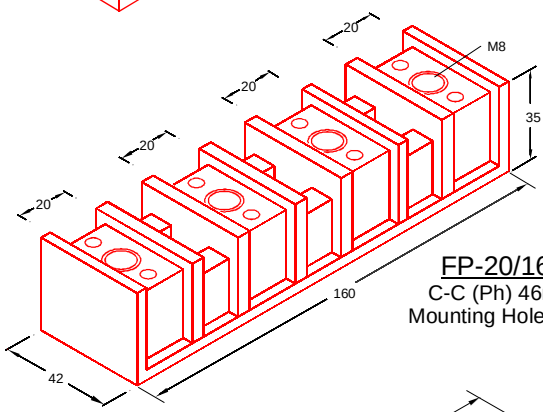

FP-20/160
C-C (Ph) 46mm
Mounting Hole Ø8.5

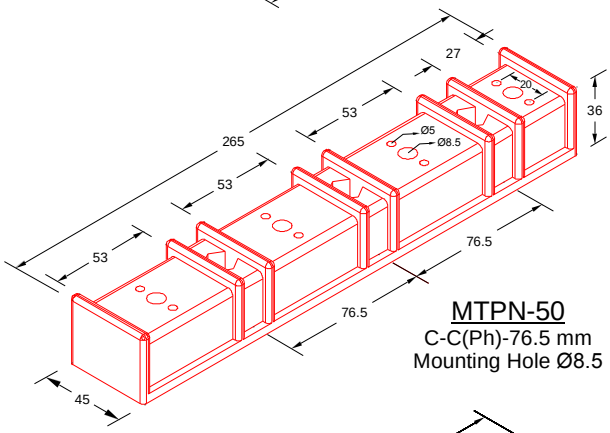

MTPN-50
C-C(Ph)-76.5 mm
Mounting Hole Ø8.5

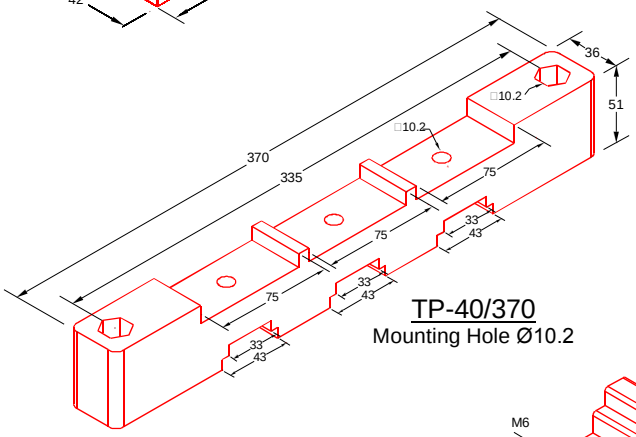

TP-40/370
Mounting Hole Ø10.2

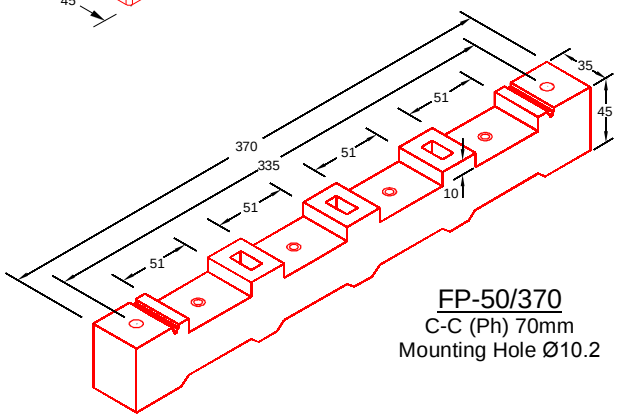

FP-50/370
C-C (Ph) 70mm
Mounting Hole Ø10.2

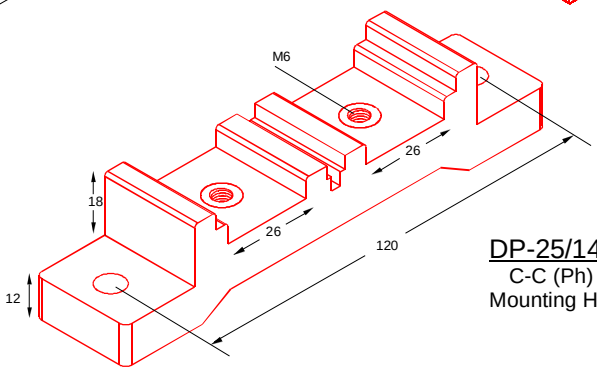

DP-25/140 (M6)
C-C (Ph) 46mm
Mounting Hole Ø8.5

- Material : SMC (Sheet Moulding Compound) / DMC (Dough Moulding Compound) c UL us UL File No. QEUY2.E249670 (Halogen Free)
- All Dimensions are in MM
- C-C (Ph)=Centre to Centre Between Phases
- Mounting Detail on Page No. 66
- All Insulators are CE certified
- For technical details of Busbar support & Insulator, please refer POWERMAT TECHNICAL NOTES - 01/15.
- For checking the suitability of a support & insulator for a fault current, please ask for POWERMAT FAULT LEVEL CALCULATOR Software.

Adjustable Busbar Support

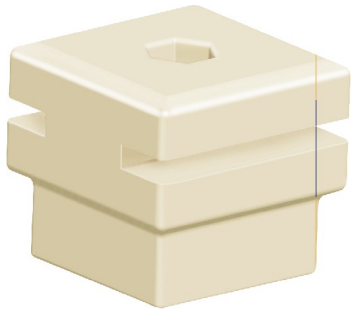

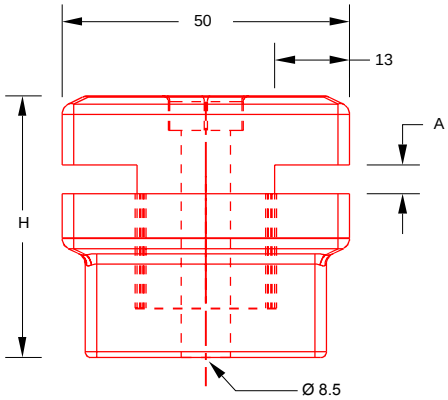

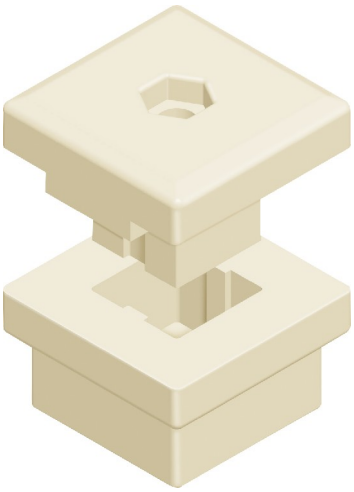

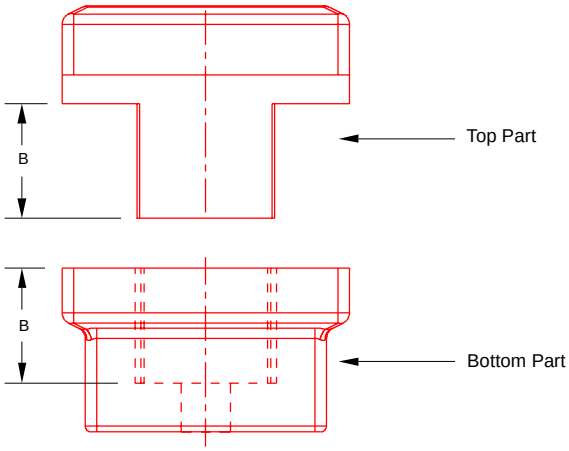

Part No.	Busbar	H* (mm)	A* (mm)	B (mm)
HB 10/50	6mm x 1run	46.5	6	20
	6mm x 2run	59.5	19	20
	10mm x 1run	50.5	10	20
	12mm x 1run	52.5	12	20
HB 12/50	6mm x 3run	86.0	31	29
	10mm x 2run	86.0	31	29
	12mm x 1run	67.0	12	29

* H & A dimensions are variables
* Mounting Hole - Ø8.5

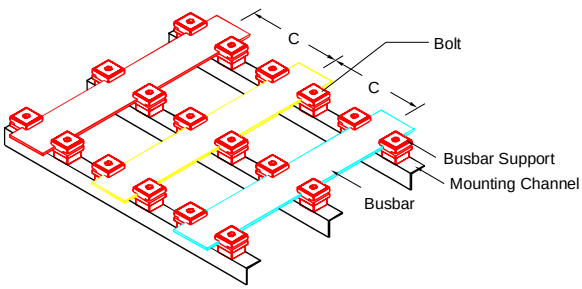

Single Busbar Fixing Arrangement
C-C = Centre to Centre Phase distance in mm

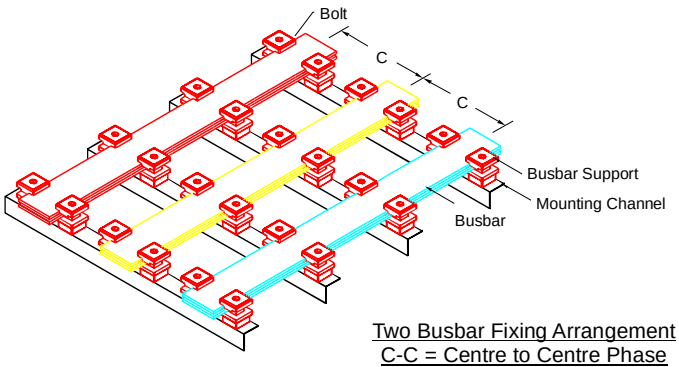

Two Busbar Fixing Arrangement
C-C = Centre to Centre Phase distance in mm

- Material : SMC (Sheet Moulding Compound) / DMC (Dough Moulding Compound) UL File No. QEUY2.E249670 (Halogen Free)
- All Dimensions are in MM
- C-C (Ph)=Centre to Centre Between Phases
- All Insulators are CE certified

- For technical details of Busbar support & Insulator, please refer POWERMAT TECHNICAL NOTES - 01/15.
- For checking the suitability of a support & insulator for a fault current, please ask for POWERMAT FAULT LEVEL CALCULATOR Software.

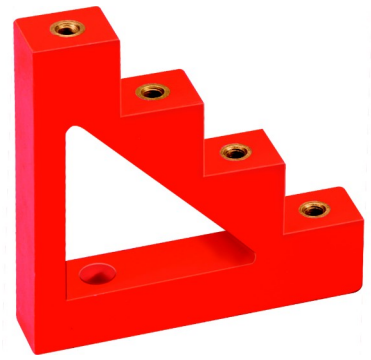

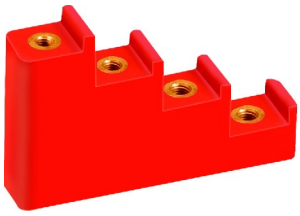

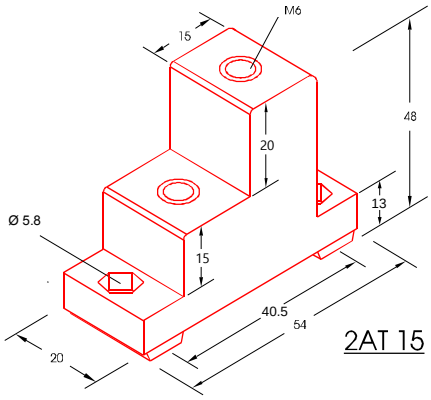

2AT 15

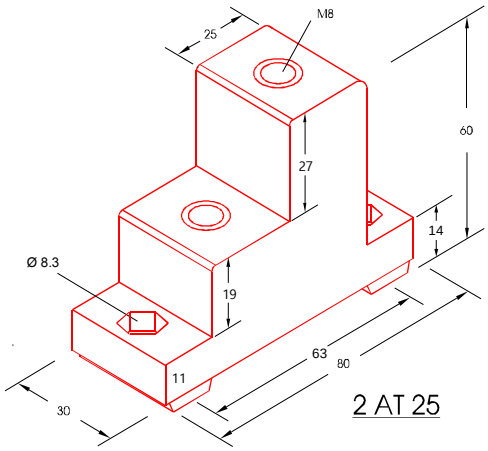

2 AT 25

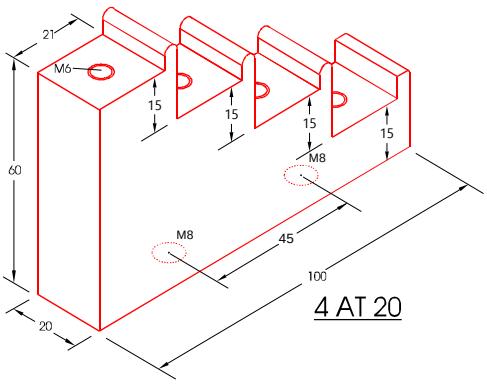

4 AT 20

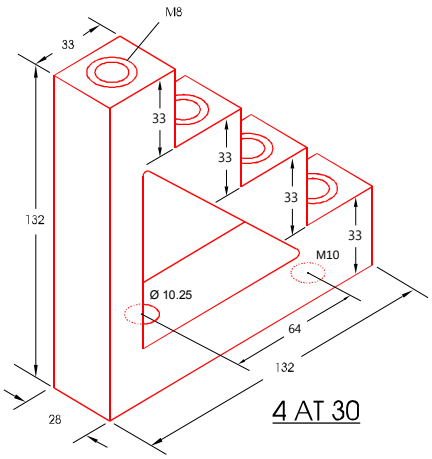

4 AT 30

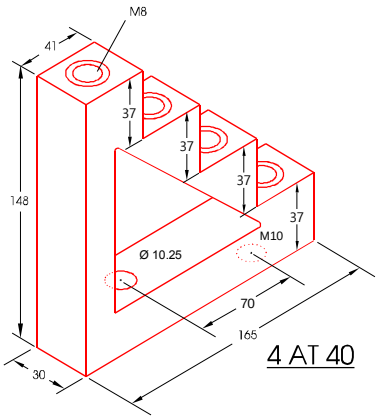

4 AT 40

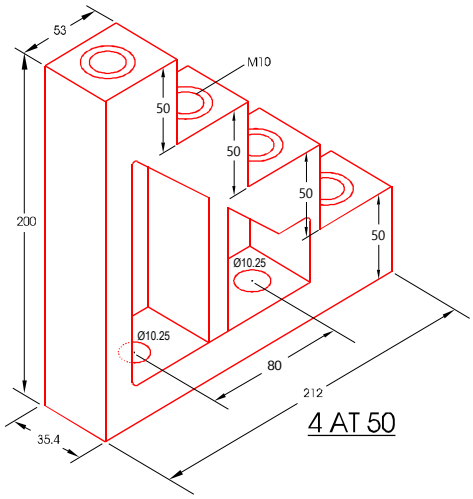

4 AT 50

- Material : DMC (Dough Moulding Compound) UL File No. QEUY2.E249670 (Halogen Free)
- Insert : Brass / Steel (Zinc Passivated)
- Insert Material detail on page no. 66
- Mounting Detail on Page No. 67
- All Insulators are CE certified

- For technical details of Busbar support & Insulator, please refer POWERMAT TECHNICAL NOTES - 01/15.
- For checking the suitability of a support & insulator for a fault current, please ask for POWERMAT FAULT LEVEL CALCULATOR Software.

Step Insulators

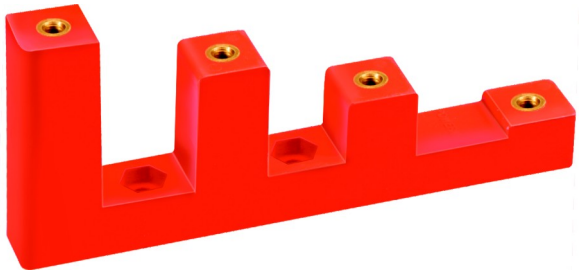

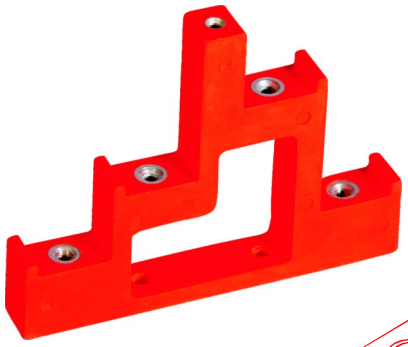

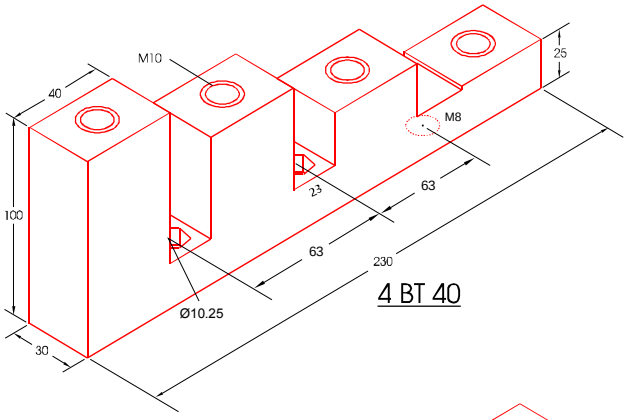

4 BT 40

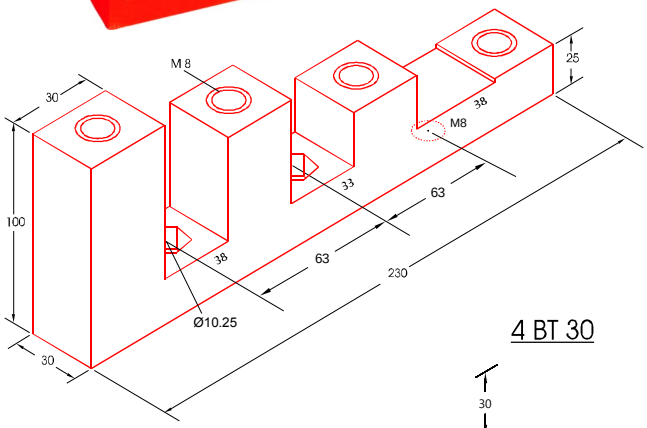

4 BT 30

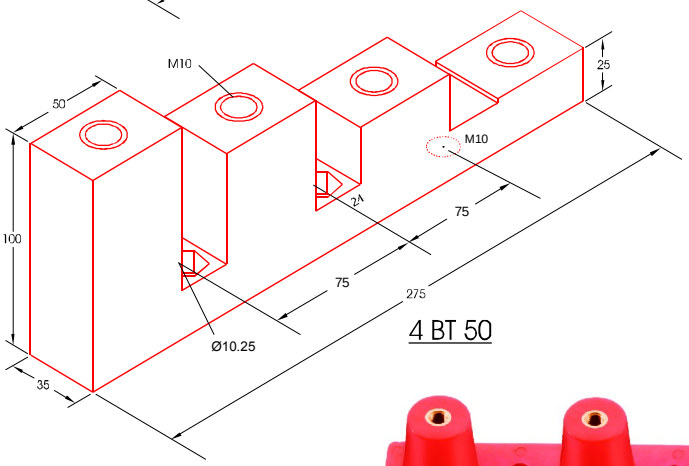

4 BT 50

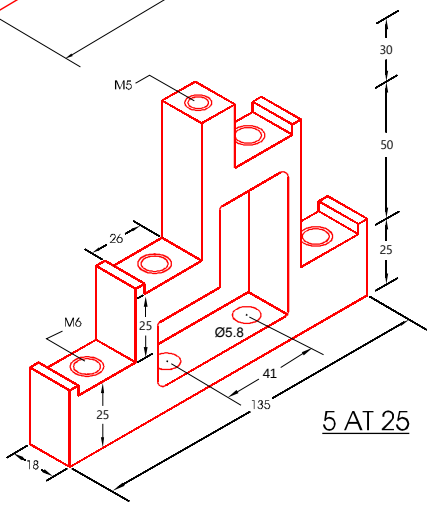

5 AT 25

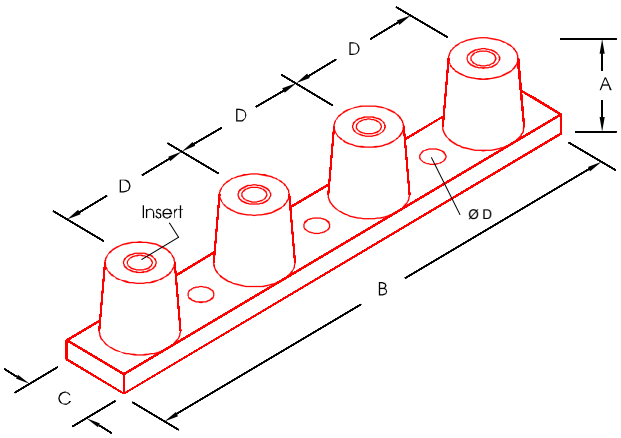

POWERMAT code	Dimension A	B	C	E	ØD	Insert	TL
4C-525	25	120	20	35	6	M 5	7
4C-630	30	185	25	52	6.5	M 6	9
4C-845	45	260	35	70	8	M 8	12
PD4C-628	28	215	25	60	6.2	M 6	7
PD4C-845	45	230	35	60	8	M 8	12

- Material : DMC (Dough Moulding Compound) UL File No. QEUY2.E249670 (Halogen Free)
- Insert : Brass / Steel (Zinc Passivated)
- Insert Material detail on page no. 66
- Mounting Detail on Page No. 67
- All Insulators are CE certified

- For technical details of Busbar support & Insulator, please refer POWERMAT TECHNICAL NOTES - 01/15.
- For checking the suitability of a support & insulator for a fault current, please ask for POWERMAT FAULT LEVEL CALCULATOR Software.

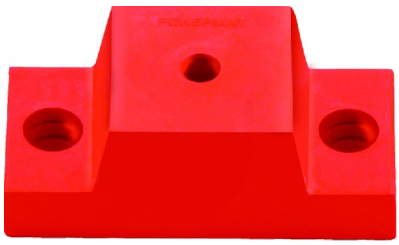

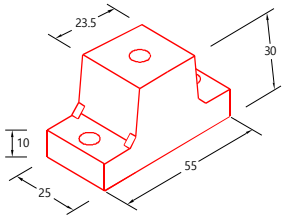

SP-30

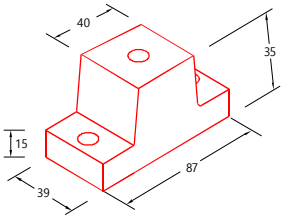

SP-35

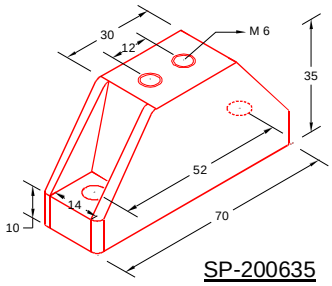

SP-200635

Terminal Supports (Material : DMC)

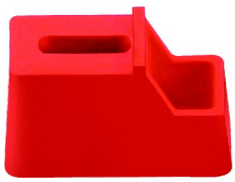

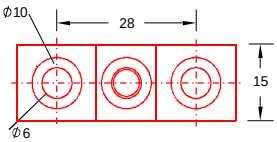

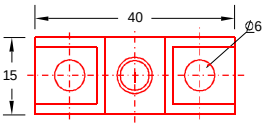

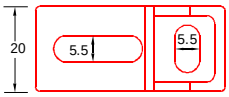

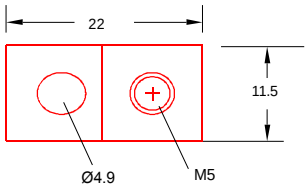

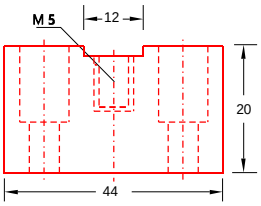

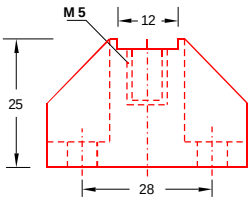

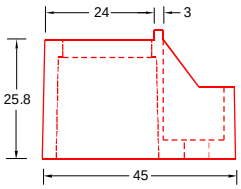

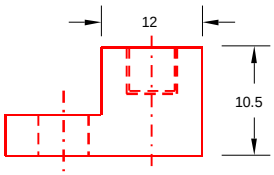

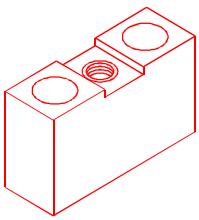

ELS 12 (M5)

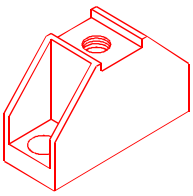

NLS 12 (M5)

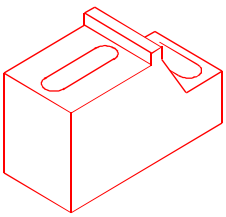

01EBS 25

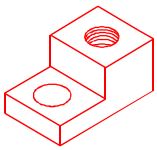

01NLSPS 11 (M5)

- Material : DMC (Dough Moulding Compound) c UL us UL File No. QEUY2.E249670 (Halogen Free)
- Insert : Brass / Steel (Zinc Passivated)
- Insert Material detail on page no. 66
- All Insulators are CE certified

- For technical details of Busbar support & Insulator, please refer POWERMAT TECHNICAL NOTES - 01/15.
- For checking the suitability of a support & insulator for a fault current, please ask for POWERMAT FAULT LEVEL CALCULATOR Software.

Neutral Link

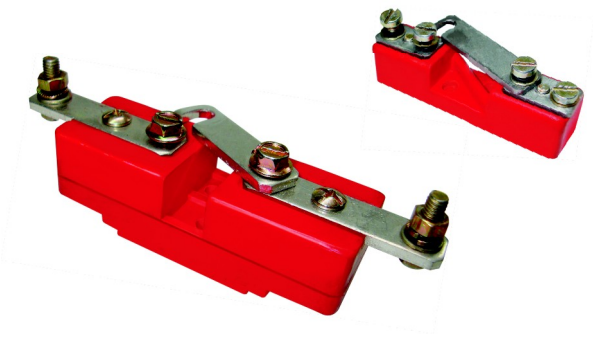

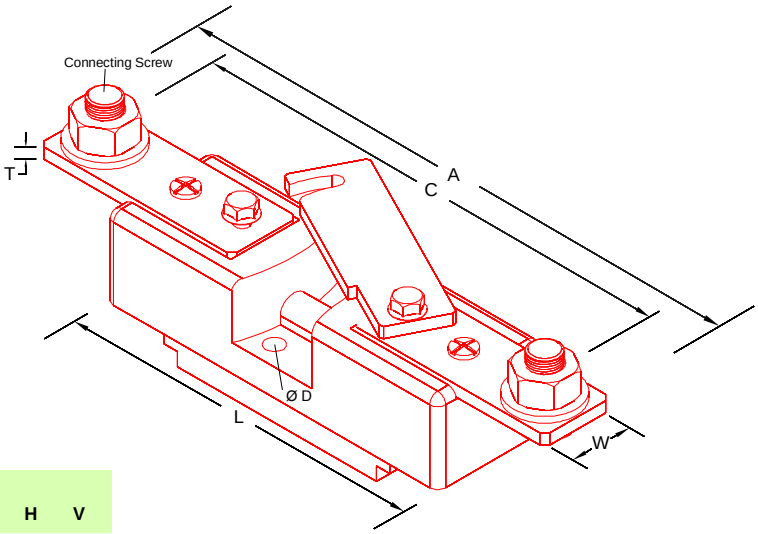

POWERMAT code	A	C	W	L	T	C.Screw	Ø D	H	V
DTNL 32 Amp	65	57	10	65	2	M 4	5	10.8	6
DTNL 63 Amp	78	67	12	78	2.5	M 5	5	11	10
DTNL 125 Amp	128	114	16	100	3	M 6	5.5	6	20
DTNL 200 Amp	160	138	20	100	3	M 8	5.5	6	20
DTNL 400 Amp	200	174	25	125	5	M 10	5.5	26	25
DTNL 600 Amp	240	210	38	140	6	M 10	6	24	24

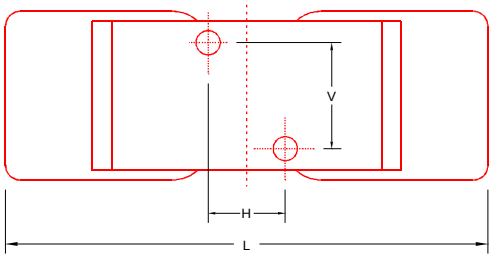

Mounting Dimensions of DTNL Series

Modular Support

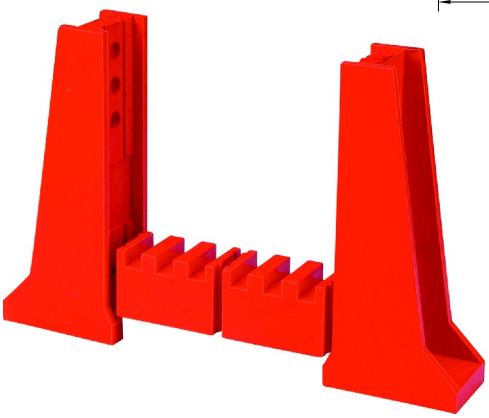

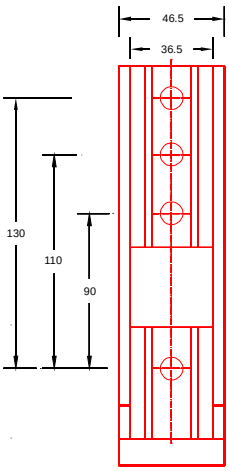

ST 6080100

ST 6080100

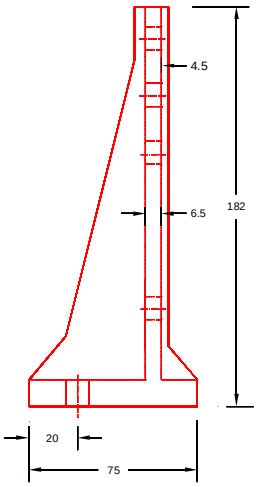

M-310

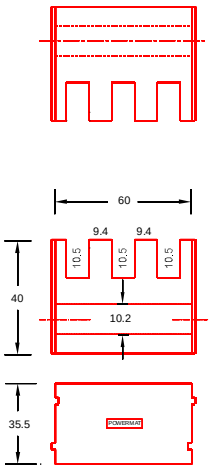

ST 6080100

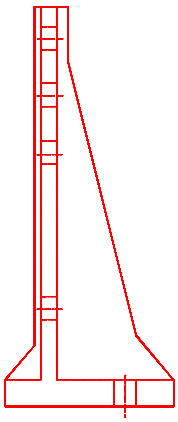

SPM - 310-A

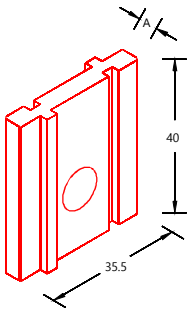

POWERMAT code	A
SPM - 310 - 05	5
SPM - 310 - 10	10
SPM - 310 - 15	15

- Material : DMC (Dough Moulding Compound) c UL us UL File No. QEUY2.E249670 (Halogen Free)
- Insert : Brass / Steel (Zinc Passivated)
- Insert Material detail on page no. 66
- Mounting Detail on Page No. 67
- All Insulators are CE certified

- For technical details of Busbar support & Insulator, please refer POWERMAT TECHNICAL NOTES - 01/15.
- For checking the suitability of a support & insulator for a fault current, please ask for POWERMAT FAULT LEVEL CALCULATOR Software.

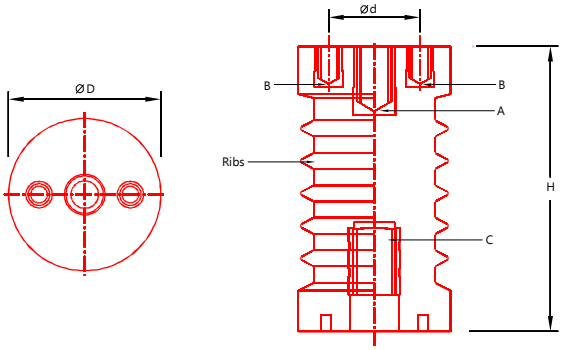

PRODUCT CODE	HEIGHT mm	VOLTAGE RATING	RIBS (Nos.)	CREEPAGE mm	Ø D mm	Ø d mm	INSERTS A	INSERTS B	INSERTS C
MV 5035	35	1.6 Kv	4	48	50	25	-	M-08 X 15 Lg	M-08 X 15 Lg
MV 7535	35	1.6 Kv	4	67	75	30	-	M-10 X 15 Lg	M-10 X 15 Lg
MV 6040	40	3.5 Kv	1	55	60	36	M-10 X 15 Lg	M-08 X 12 Lg	M-10 X 15 Lg
MV 4050	50	3.5 Kv	1	55	40	-	M-10 X 15 Lg	-	M-10 X 15 Lg
MV 5050	50	3.5 Kv	4	65	50	25	-	M-08 X 20 Lg	M-08 X 20 Lg
MV 7550	50	3.5 Kv	4	82	75	30	-	M-10 X 20 Lg	M-10 X 20 Lg
MV 606560	60	5.5 Kv	2	90	60/65	36	M-12 X 20 Lg	M-08 X 20 Lg	M-12 X 20 Lg
MV 859060	60	5.5 Kv	2	90	85/90	40	M-16 X 20 Lg	M-10 X 20 Lg	M-16 X 20 Lg
MV 6075	75	6.8 Kv	2	112	60	36	M-10 X 20 Lg	M-06 X 15 Lg	M-12 X 25 Lg
PDMV 6075	75	6.8 Kv	2	112	60	36	M-10 X 20 Lg	M-08 X 15 Lg	M-12 X 25 Lg
MV 9580	80	6.8 Kv	1	92	90	55	-	M-10 X 20 Lg	M-16 X 30 Lg
MV 6090	90	8.5 Kv	3	140	60	36	M-10 X 20 Lg	M-06 X 15 Lg	M-12 X 25 Lg
PDMV 6090	90	8.5 Kv	3	140	60	36	M-10 X 20 Lg	M-08 X 15 Lg	M-12 X 25 Lg
MV 9011082	110	12 Kv	4	209	82/90	40	-	M-10 X 15 Lg	M-12 X 20 Lg
MV 60130	130	12 Kv	5	200	60	36	M-12 X 25 Lg	M-06 X 15 Lg	M-16 X 35 Lg
PDMV 60130	130	12 Kv	5	200	60	36	M-12 X 25 Lg	M-08 X 15 Lg	M-16 X 35 Lg
MV 75130	130	12 Kv	5	215	75	45	M-16 X 35 Lg	M-10 X 20 Lg	M-20 X 35 Lg
MV 75130/2*	130	12 Kv	5	215	75	45	M-12 X 25 Lg	M-08 X 20 Lg	A-B
MV 75130/7	130	12 Kv	7	256	75	45	M-16 X 35 Lg	M-10 X 20 Lg	M-20 X 40 Lg
MV 90130	130	12 Kv	7	372	90	36	-	M-16 X 30 Lg	M-20 X 35 Lg
MV 8614580	145	16 Kv	7	260	80/86	40	-	M-10 X 15 Lg	M-12 X 20 Lg
MV 90150	150	16 Kv	7	392	90	36	-	M-16 X 30 Lg	M-20 X 35 Lg
MV 70210	210	22 Kv	9	285	70	36	M-10 X 25 Lg	M-06 X 15 Lg	M-16 X 55 Lg
PDMV 70210	210	22 Kv	9	285	70	36	M-10 X 25 Lg	M-08 X 15 Lg	M-16 X 55 Lg
MV 70210/2	210	22 Kv	9	285	70	36	M-12 X 25 Lg	M-08 X 20 Lg	A-B
MV 80300	300	35 Kv	12	450	80	36	M-10 X 25 Lg	M-06 X 15 Lg	M-16 X 75 Lg
PDMV 80300	300	35 Kv	12	450	80	36	M-10 X 25 Lg	M-08 X 15 Lg	M-16 X 75 Lg
MV 95300	300	35 Kv	12	630	95	46	M-16 X 55 Lg	M-10 X 20 Lg	M-22 X 65 Lg

- Material : Cast Resin / DMC (Dough Moulding Compound) UL File No. QEUY2.E249670 (Halogen Free)

++ same insert configuration on both sides
- All Dimensions are in MM
- Insert : Brass / Mild Steel (Zinc Passivated)
- Insert Material detail on page no. 66
- All Insulators are CE certified
- For technical details of Busbar support & Insulator, please refer POWERMAT TECHNICAL NOTES - 01/15.
- For checking the suitability of a support & insulator for a fault current, please ask for POWERMAT FAULT LEVEL CALCULATOR Software.

Brass Terminal Bars

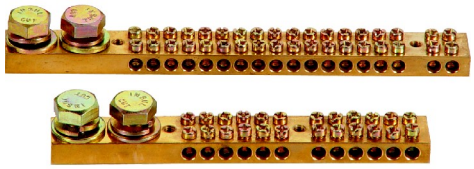

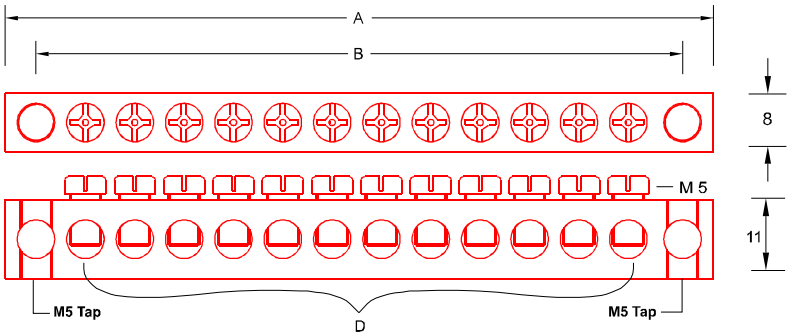

POWERMAT CODE	No. OF TERMINATIONS M5		DIMENSION (MM)	
	D	E	A	B
01 NLSP 4	4	-	44	35
01 NLSP 6	6	-	58	49
01 NLSP 8	8	-	72	63
01 NLSP 10	10	-	86	77
01 NLSP 12	12	-	100	91
01 NLSP 15	15	-	121	112
01 NLSP 18	18	-	142	133

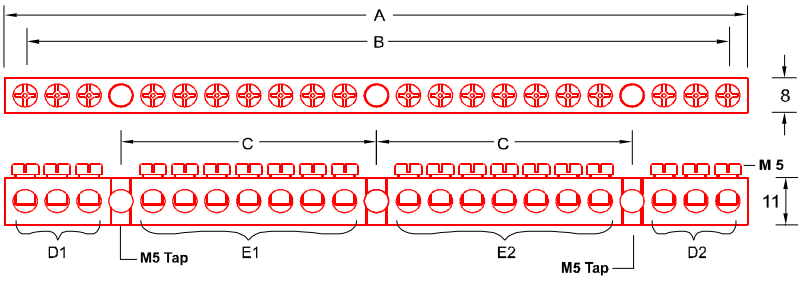

POWERMAT CODE	No. OF TERMINATIONS M5		DIMENSION (MM)		
	D=D1+D2	E=E1+E2	A	B	C
01 NLSP 20	6=3+3	14=7+7	163	154	56
01 NLSP 26	6=3+3	20=10+10	205	196	77
01 NLSP 30	6=3+3	24=12+12	233	224	91
01 NLSP 38	6=3+3	32=16+16	289	280	119
01 NLSP 40	6=3+3	34=17+17	305	296	112
01 NLSP 50	6=3+3	42=21+21	375	366	112
01 NLSP 60	6=3+3	54=27+27	445	436	147

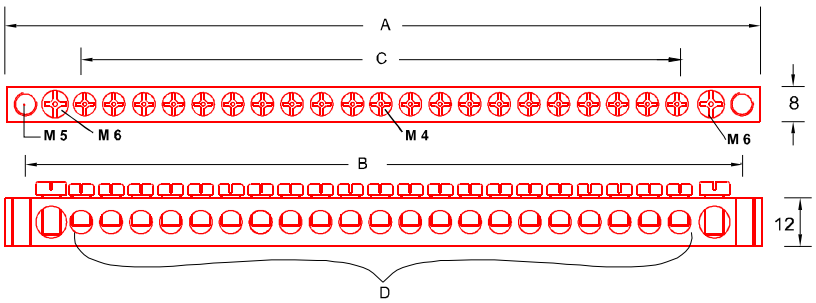

POWERMAT CODE	No. OF TERMINATIONS M4 / M6		DIMENSION (MM)		
	D	E	A	B	C
02 NLSP 6	6 / 2	-	77	67	35
02 NLSP 12	12 / 2	-	119	109	77
02 NLSP 15	15 / 2	-	140	130	98
02 NLSP 18	18 / 2	-	161	151	119
02 NLSP 21	21 / 2	-	182	172	140
02 NLSP 24	24 / 2	-	203	193	161

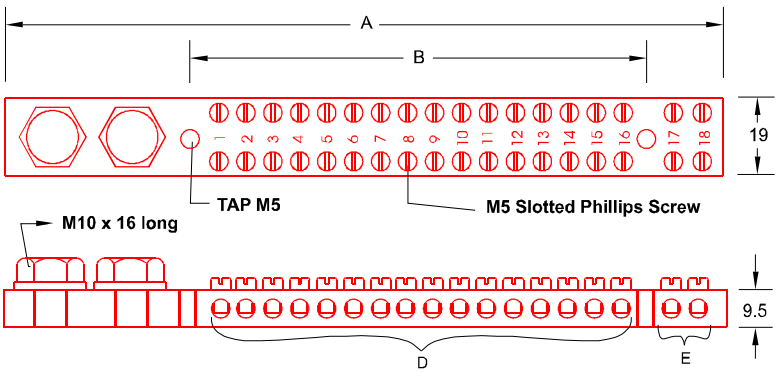

POWERMAT CODE	No. OF TERMINATIONS M5		DIMENSION (MM)	
	D	E	A	B
02 EB 6	6	-	102	50
02 EB 12	6	6	144	50
02 EB 18	16	2	187	120
02 EB 24	16	8	230	120
02 EB 30	16	20	273	120
02 EB 36	16	14	315	120

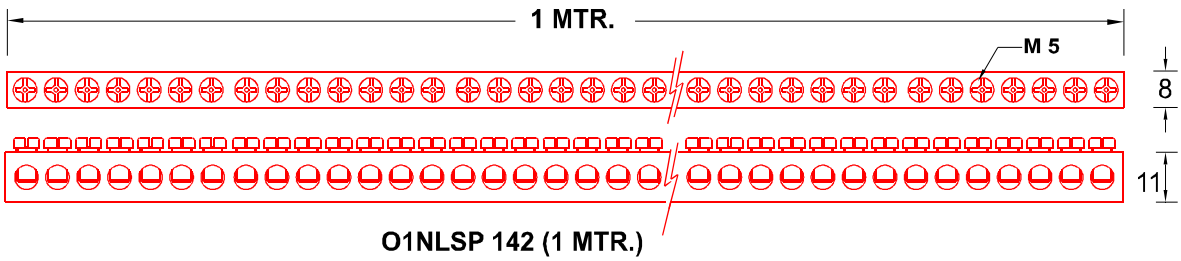

O1NLSP 142 (1 MTR.)

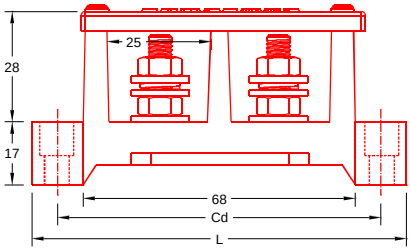

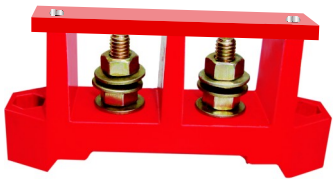

2 - Way Connector

POWERMAT code	Overall Length L	Dimension Distance Between Holes Cd	No.of Connectors	Bolt Size
TB 2106	95	82	2	M 6 x 22 mm

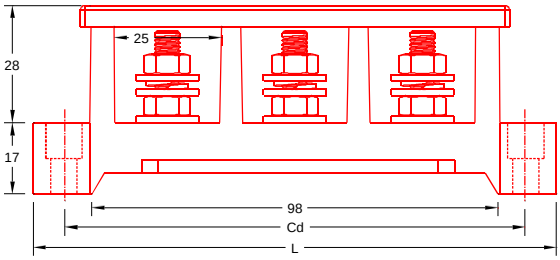

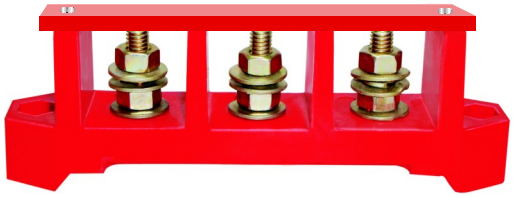

3 - Way Connector

POWERMAT code	Overall Length L	Dimension Distance Between Holes Cd	No.of Connectors	Bolt Size
TB 3106	125	111	3	M 6 x 22 mm

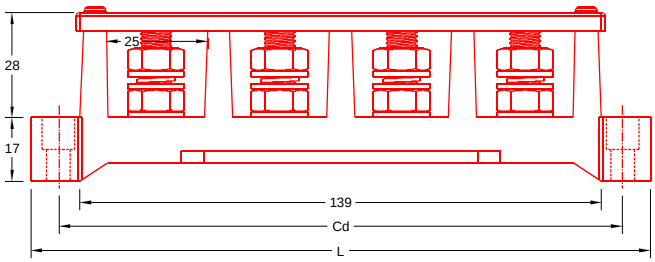

4 - Way Connector

POWERMAT code	Overall Length L	Dimension Distance Between Holes Cd	No.of Connectors	Bolt Size
TB 4106	165	150	4	M6 x 22mm
TB 4108	165	150	4	M8 x 22mm

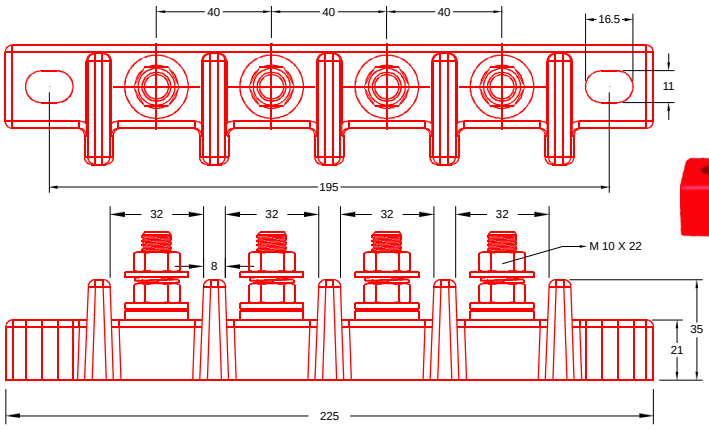

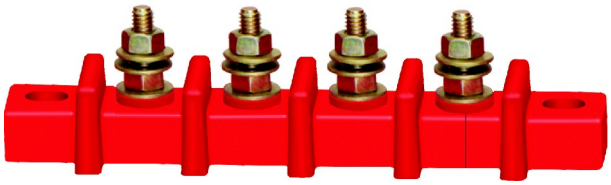

TB 4210

- Material : DMC (Dough Moulding Compound) UL File No. QEUY2.E249670 (Halogen Free)
- All Dimensions are in MM
- Stud Insert : Brass
- Insert Material detail on page no. 66

Locks for Panel Board

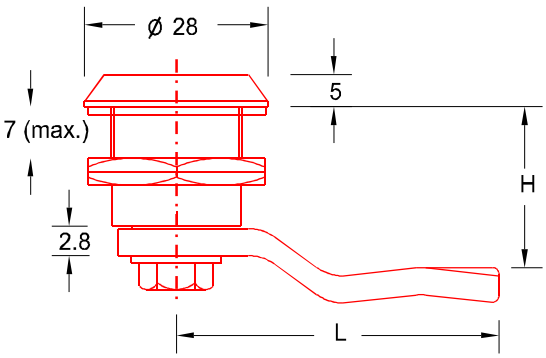

Screw Driver Head

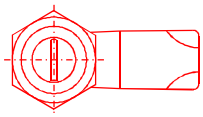

POWERMAT Code	Dimension H	Dimension L
101-125S	25	35
101-125L	25	45
101-145S	45	35
101-145L	45	45
101-150S	50	35
101-150L	50	45
101-155S	55	35
101-155L	55	45
101-130L	30	45

Point Head

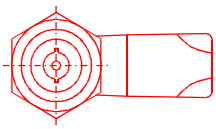

POWERMAT Code	Dimension H	Dimension L
101-2L25S	25	35
101-225L	25	45
101-245S	45	35
101-245L	45	45
101-250S	50	35
101-250L	50	45
101-255S	55	35
101-255L	55	45

Triangle Head

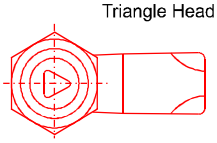

POWERMAT Code	Dimension H	Dimension L
101-325S	25	35
101-325L	25	45
101-345S	45	35
101-325L	45	45
101-350S	50	35
101-350L	50	45
101-355S	55	35
101-355L	55	45

Square Head

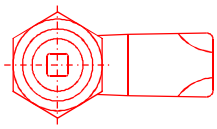

POWERMAT Code	Dimension H	Dimension L
101-425S	25	35
101-425L	25	45
101-445S	45	35
101-445L	45	45
101-450S	50	35
101-450L	50	45
101-455S	55	35
101-455L	55	45

Key Head

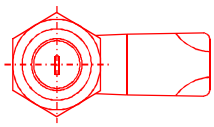

POWERMAT Code	Dimension H	Dimension L
101-KL25S	25	35
101-KL25L	25	45
101-KL45S	45	35
101-KL45L	45	45
101-KL50S	50	35
101-KL50L	50	45
101-KL55S	55	35
101-KL55L	55	45

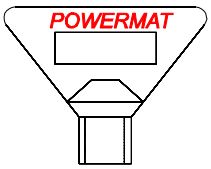

Key

101 K2 101 K3 101 K4

POWERMAT

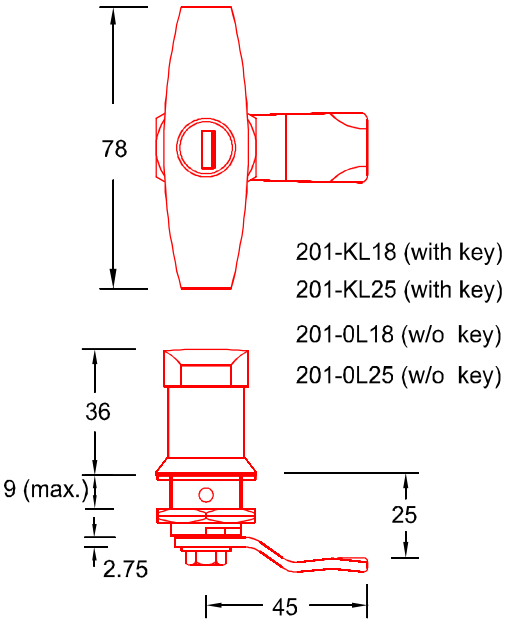

201-KL18 (with key)
201-KL25 (with key)
201-0L18 (w/o key)
201-0L25 (w/o key)

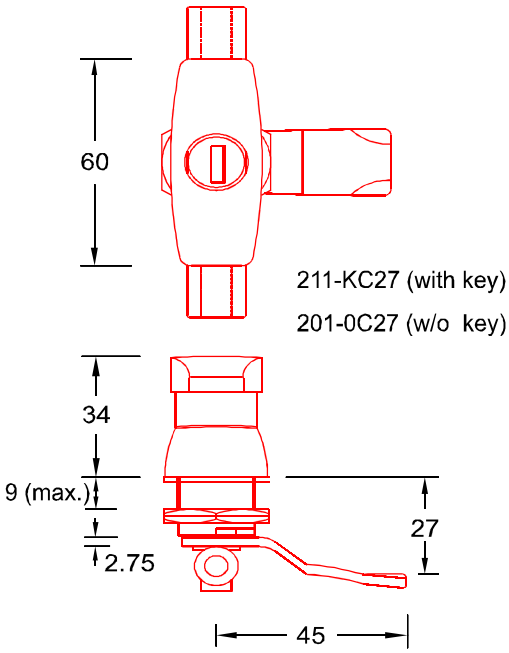

211-KC27 (with key)
201-0C27 (w/o key)

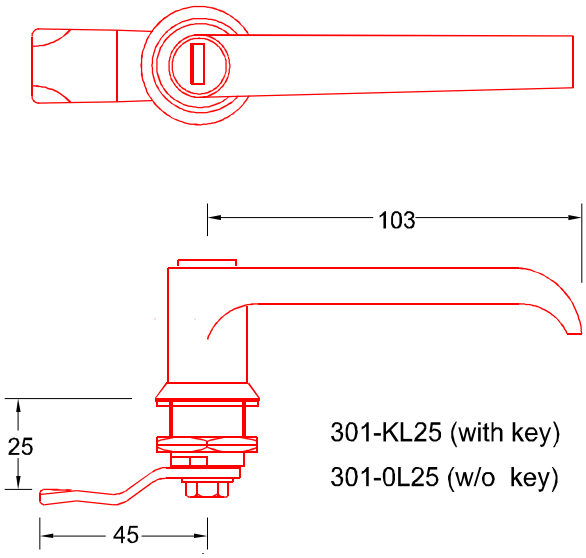

301-KL25 (with key)
301-0L25 (w/o key)

Specification :
Body material -
Zinc. alloy (Zamak3).
Lever material- Mild Steel
Both are Chrome plated.

• All Dimensions are in MM

Heat Shrinkable Sleeves

Application : Bus Bar Insulation for Low Tension System in Control Panels and Switchgear Systems.

Properties :

Working Temperature	90° C
Dielectric Strength	*10 KV/mm*
Insulation Resistance	20 x 10^{10} Ohms at 500 V DC
Tensile Strength	*400 Kg/cm (min.)*
Ultimate Elongation	11 % (min.)
Chemical Resistance	*Good*
Fire Resistance	Self Extinguishing
Shrinkable Temperature	*105° C - 110° C for 4-5 min.*
Shrinkage	30 % - 35 %
Dimensional Variance	*± 1.5 mm (for size 17mm to 61 mm) ± 3 mm (for size 73mm to 230 mm)*
Thickness	0.17 ± 0.02 mm

Length per Roll : 100 mtr.

Width (mm)	Maximum Busbar Size (mm x mm)
17	9 x 3 mm; 10 x 3 mm
20	9 x 6 mm; 10 x 6 mm; 12 x 3 mm
25	12 x 6 mm; 15 x 3 mm
30	16 x 3 mm; 18 x 6 mm; 20 x 3 mm
35	20 x 6 mm; 25 x 3 mm
41	25 x 6 mm; 25 x 10 mm
48	25 x 12 mm; 30 x 6 mm; 30 x 10 mm
55	30 x 12 mm; 38 x 6 mm
61	38 x 12 mm; 40 x 6 mm; 40 x 10 mm; 40 x 12 mm
73	50 x 6 mm
81	50 x 10 mm; 50 x 12 mm
85	60 x 6 mm; 60 x 10 mm
93	75 x 6 mm
103	75 x 12 mm; 80 x 6 mm
110	80 x 12 mm; 80 x 12 mm; 90 x 6 mm; 90 x 12mm
128	100 x 6 mm; 100 x 10 mm
140	100 x 12 mm
170	125 x 6 mm; 125 x 10 mm
190	150 x 6 mm; 150 x 10 mm; 150 x 12 mm
210	175 x 6 mm; 175 x 10 mm; 175 x 12 mm
230	200 x 12 mm

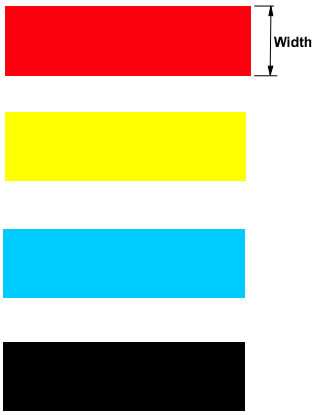

- Material : PVC
- Colour Specification : Red; Yellow; Blue; Black

- All Dimensions are in MM

RODS

POWERMAT code	Ø Dia (mm)
PROD 006	6
PROD 007	7
PROD 008	8
PROD 010	10
PROD 012	12
PROD 016	16
PROD 020	20
PROD 025	25

** Length 1 meter or can be any as per requirement.

Material:- Polyester/Epoxy.

TUBES

POWERMAT code	Ø Dia (mm)	
	I.D	O.D
PT 0610	6.5	10
PT 0812	8.5	12
PT 1016	10.5	16
PT 1220	12.5	20
PT 2025	19.0	25

** Length 1 meter or can be any as per requirement.

Material:- Polyester/Epoxy.

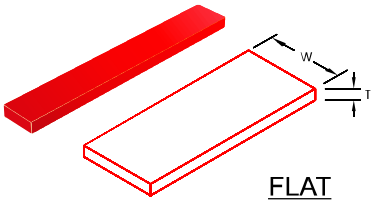

FLAT

POWERMAT code	Dimension (mm)	
	W	T
PF 0425	25	04
PF 1225	25	12
PF 1030	30	10
PF 1040	40	10
PF 1050	50	10
PF 2060	60	20

** Length 1 meter or can be any as per requirement.

Material:- Polyester/Epoxy.

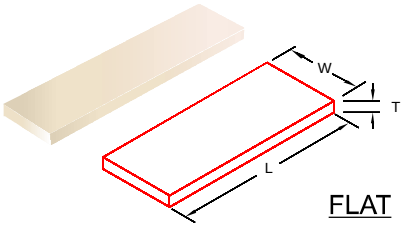

FLAT

POWERMAT code	Dimension (mm)		
	W	T	L
SF 205035	50	20	350
SF 403560	35	40	600
SF 305078	50	30	780

** Material SMC

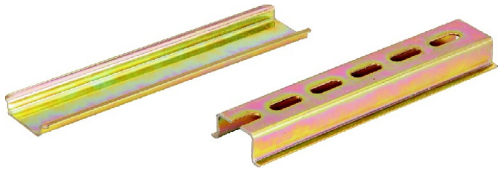

DINRAIL
Plane & Slotted

DIN 357508	- 35 x 7.5 x 0.8mm
DIN 357510	- 35 x 7.5 x 1.0mm
DIN 351515	- 35 x 15 x 1.5mm
DIN 32150915	- 32 x 15 x 1.5mm

DIN 357508 S	- 35 x 7.5 x 0.8mm
DIN 357510 S	- 35 x 7.5 x 1.0mm
DIN 351515 S	- 35 x 15 x 1.5mm
DIN 32150915 S	- 32 x 15 x 1.5mm

* Standard length 1 metre or can be any as per requirement
Material CRGO Sheet, Zinc Passivated

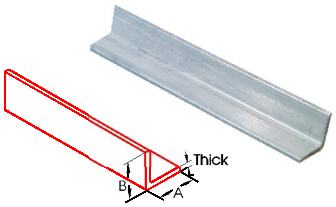

ANGLES

POWERMAT code	Dimension (mm)		
	A	B	Thk.
PA 353505	35	35	5
PA 505006	50	50	6
PA 755010	75	50	10

** Length 1 meter or can be any as per requirement.

Material:- Polyester.

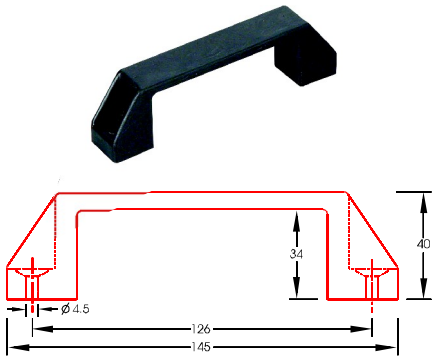

ABS HANDLE
AH 40145

• Material : SMC (Sheet Moulding Compound) c UL us UL File No. QEUY2.E249670 (Halogen Free)

• All Dimensions are in MM

Document Holder

POWERMAT code	Dimension					
	A	B	C	D	E	F
DH A5	190	185	175	143	160	20
DH A4	280	220	266	150	245	30

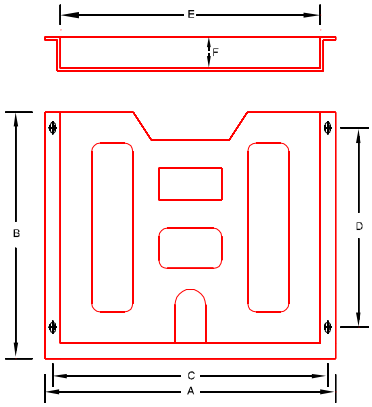

Air Vent Cover

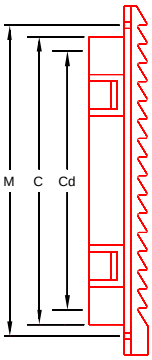

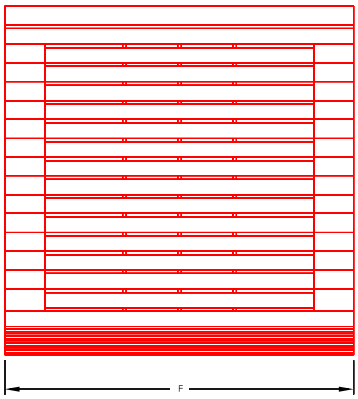

POWERMAT code	Dimension M	Cut off Size C	Overall Size F	Fan Mounting Cd	Fan Size Inch
AV 130	130 x 130mm	123 x 123mm	148 x 148mm	105 x 105mm	4
AV 184	184 x 184mm	177 x 177mm	214 x 214mm	155 x 155mm	6
AV 230	236 x 236mm	224 x 224mm	260 x 260mm	204 x 204mm	8
AV 184 DM-604	184 x 184mm	177 x 177mm	214 x 214mm	105 x 105mm	4
AV 230 DM-806	236 x 236mm	224 x 224mm	260 x 260mm	155 x 155mm	6

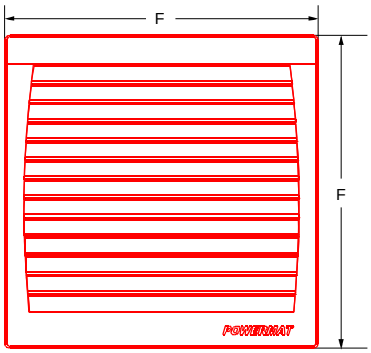

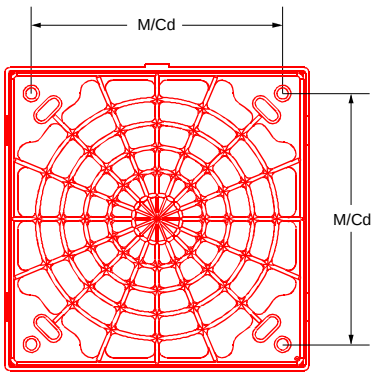

Powermat Code	Fan Size Inch	Over all Size F	Mounting M	Fan Mounting Cd	Thickness
EV 100	4	131 x 131mm	105 x 105mm	105 x 105mm	23
EV 150	6	185 x 185mm	155 x 155mm	155 x 155mm	25
EV 200	8	236 x 236mm	204 x 204mm	204 x 204mm	30

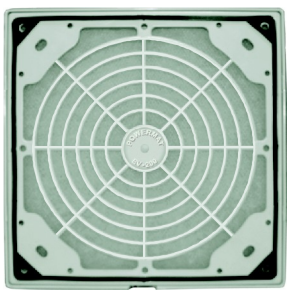

- Material : ABS (High Grade)
- Degree of protection : IP-54

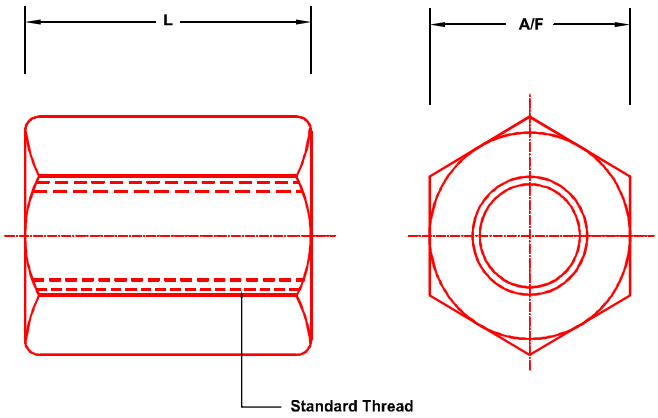

POWERMAT code	Dimension		
SPACER FOR M 2.5	Thread	L	A / F
PTS/M2.5/AF5/L3	M 2.5	3	5
PTS/M2.5/AF5/L4	M 2.5	4	5
PTS/M2.5/AF5/L5	M 2.5	5	5
PTS/M2.5/AF5/L6	M 2.5	6	5
PTS/M2.5/AF5/L7	M 2.5	7	5
PTS/M2.5/AF5/L8	M 2.5	8	5
PTS/M2.5/AF5/L9	M 2.5	9	5
PTS/M2.5/AF5/L10	M 2.5	10	5
PTS/M2.5/AF5/L11	M 2.5	11	5
PTS/M2.5/AF5/L12	M 2.5	12	5
PTS/M2.5/AF5/L13	M 2.5	13	5
PTS/M2.5/AF5/L14	M 2.5	14	5
PTS/M2.5/AF5/L15	M 2.5	15	5
SPACER FOR M 3			
PTS/M3/AF5/L3	M 3	3	5
PTS/M3/AF5/L4	M 3	4	5
PTS/M3/AF5/L5	M 3	5	5
PTS/M3/AF5/L6	M 3	6	5
PTS/M3/AF5/L7	M 3	7	5
PTS/M3/AF5/L8	M 3	8	5
PTS/M3/AF5/L9	M 3	9	5
PTS/M3/AF5/L10	M 3	10	5
PTS/M3/AF5/L11	M 3	11	5
PTS/M3/AF5/L12	M 3	12	5
PTS/M3/AF5/L13	M 3	13	5
PTS/M3/AF5/L14	M 3	14	5
PTS/M3/AF5/L15	M 3	15	5
SPACER FOR M 4			
PTS/M4/AF7/L3	M 4	3	7
PTS/M4/AF7/L4	M 4	4	7
PTS/M4/AF7/L5	M 4	5	7
PTS/M4/AF7/L6	M 4	6	7
PTS/M4/AF7/L7	M 4	7	7
PTS/M4/AF7/L8	M 4	8	7
PTS/M4/AF7/L9	M 4	9	7
PTS/M4/AF7/L10	M 4	10	7
PTS/M4/AF7/L11	M 4	11	7
PTS/M4/AF7/L12	M 4	12	7
PTS/M4/AF7/L13	M 4	13	7
PTS/M4/AF7/L14	M 4	14	7
PTS/M4/AF7/L15	M 4	15	7

• All Dimensions are in MM
• Material : Brass / Steel (Zinc Passivated) (Steel grade EN-1AL)

Standoff Pillar

POWERMAT code	Thread	Dimension L	A/F	L 1
SPACER FOR M2.5				
PSP/M2.5/AF5/L18	M 2.5	18	5	8
PSP/M2.5/AF5/L20	M 2.5	20	5	8
PSP/M2.5/AF5/L25	M 2.5	25	5	8
PSP/M2.5/AF5/L30	M 2.5	30	5	10
PSP/M2.5/AF5/L35	M 2.5	35	5	10
PSP/M2.5/AF5/L40	M 2.5	40	5	10
SPACER FOR M3				
PSP/M3/AF5/L22	M 3	22	5	8
PSP/M3/AF5/L25	M 3	25	5	8
PSP/M3/AF5/L30	M 3	30	5	10
PSP/M3/AF5/L35	M 3	35	5	10
PSP/M3/AF5/L40	M 3	40	5	10
PSP/M3/AF5/L45	M 3	45	5	10
PSP/M3/AF5/L50	M 3	50	5	10
PSP/M3/AF5/L55	M 3	55	5	10
PSP/M3/AF5/L60	M 3	60	5	10
SPACER FOR M4				
PSP/M4/AF7/L20	M 4	20	7	8
PSP/M4/AF7/L22	M 4	22	7	8
PSP/M4/AF7/L25	M 4	25	7	8
PSP/M4/AF7/L30	M 4	30	7	10
PSP/M4/AF7/L35	M 4	35	7	10
PSP/M4/AF7/L40	M 4	40	7	10
PSP/M4/AF7/L45	M 4	45	7	10
PSP/M4/AF7/L50	M 4	50	7	10
PSP/M4/AF7/L55	M 4	55	7	10
PSP/M4/AF7/L60	M 4	60	7	10
PSP/M4/AF7/L70	M 4	70	7	10
PSP/M4/AF7/L80	M 4	80	7	10
SPACER FOR M5				
PSP/M5/AF8/L20	M 5	20	8	8
PSP/M5/AF8/L22	M 5	22	8	8
PSP/M5/AF8/L25	M 5	25	8	8
PSP/M5/AF8/L30	M 5	30	8	10
PSP/M5/AF8/L35	M 5	35	8	10
PSP/M5/AF8/L40	M 5	40	8	10
PSP/M5/AF8/L45	M 5	45	8	10
PSP/M5/AF8/L50	M 5	50	8	10
PSP/M5/AF8/L55	M 5	55	8	10
PSP/M5/AF8/L60	M 5	60	8	10
PSP/M5/AF8/L70	M 5	70	8	10
PSP/M5/AF8/L80	M 5	80	8	10
SPACER FOR M6				
PSP/M6/AF10/L35	M 6	35	10	10
PSP/M6/AF10/L40	M 6	40	10	10
PSP/M6/AF10/L45	M 6	45	10	10
PSP/M6/AF10/L50	M 6	50	10	10
PSP/M6/AF10/L55	M 6	55	10	10
PSP/M6/AF10/L60	M 6	60	10	10
PSP/M6/AF10/L70	M 6	70	10	10
PSP/M6/AF10/L80	M 6	80	10	10

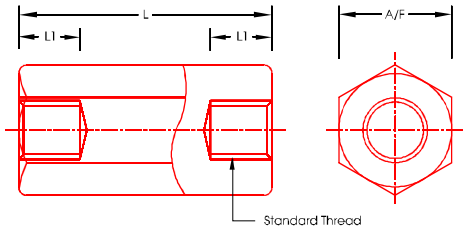

- All Dimensions are in MM
- Material : Brass / Steel (Zinc Passivated) (Steel grade EN-1AL)

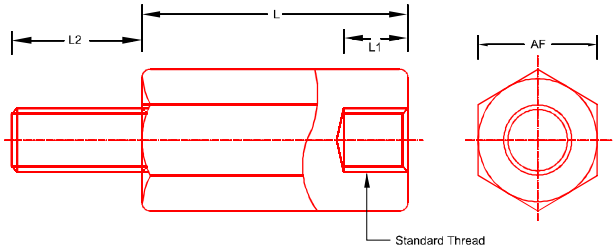

POWERMAT code	Dimension				
SPACER FOR M2.5	Thread	L	A/F	L 1	L 2
PMFP/M2.5/AF5/L10	M 2.5	10	5	6	6
PMFP/M2.5/AF5/L12	M 2.5	12	5	6	6
PMFP/M2.5/AF5/L15	M 2.5	15	5	6	6
PMFP/M2.5/AF5/L18	M 2.5	18	5	6	6
PMFP/M2.5/AF5/L20	M 2.5	20	5	6	6
PMFP/M2.5/AF5/L25	M 2.5	25	5	6	6
PMFP/M2.5/AF5/L30	M 2.5	30	5	6	6
PMFP/M2.5/AF5/L35	M 2.5	35	5	6	6
PMFP/M2.5/AF5/L40	M 2.5	40	5	6	6
SPACER FOR M3					
PMFP/M3/AF5/L10	M 3	10	5	8	6
PMFP/M3/AF5/L12	M 3	12	5	8	8
PMFP/M3/AF5/L15	M 3	15	5	10	8
PMFP/M3/AF5/L18	M 3	18	5	10	8
PMFP/M3/AF5/L20	M 3	20	5	10	8
PMFP/M3/AF5/L25	M 3	25	5	10	10
PMFP/M3/AF5/L30	M 3	30	5	10	10
PMFP/M3/AF5/L35	M 3	35	5	10	10
PMFP/M3/AF5/L40	M 3	40	5	10	10
PMFP/M3/AF5/L45	M 3	45	5	10	10
PMFP/M3/AF5/L50	M 3	50	5	10	10
PMFP/M3/AF5/L55	M 3	55	5	10	10
PMFP/M3/AF5/L60	M 3	60	5	10	10
SPACER FOR M4					
PMFP/M4/AF7/L10	M 4	10	7	8	6
PMFP/M4/AF7/L12	M 4	12	7	8	8
PMFP/M4/AF7/L15	M 4	15	7	10	8
PMFP/M4/AF7/L18	M 4	18	7	10	8
PMFP/M4/AF7/L20	M 4	20	7	10	8
PMFP/M4/AF7/L25	M 4	25	7	10	10
PMFP/M4/AF7/L30	M 4	30	7	10	10
PMFP/M4/AF7/L35	M 4	35	7	10	10
PMFP/M4/AF7/L40	M 4	40	7	10	10
PMFP/M4/AF7/L45	M 4	45	7	10	10
PMFP/M4/AF7/L50	M 4	50	7	10	10
PMFP/M4/AF7/L55	M 4	55	7	10	10
PMFP/M4/AF7/L60	M 4	60	7	10	10

POWERMAT code	Dimension				
SPACER FOR M5	Thread	L	A/F	L 1	L 2
PMFP/M5/AF8/L10	M 5	10	8	8	8
PMFP/M5/AF8/L12	M 5	12	8	8	8
PMFP/M5/AF8/L15	M 5	15	8	10	8
PMFP/M5/AF8/L18	M 5	18	8	10	8
PMFP/M5/AF8/L20	M 5	20	8	10	8
PMFP/M5/AF8/L25	M 5	25	8	10	10
PMFP/M5/AF8/L30	M 5	30	8	10	10
PMFP/M5/AF8/L35	M 5	35	8	10	10
PMFP/M5/AF8/L40	M 5	40	8	10	10
PMFP/M5/AF8/L45	M 5	45	8	10	10
PMFP/M5/AF8/L50	M 5	50	8	10	10
PMFP/M5/AF8/L55	M 5	55	8	10	10
PMFP/M5/AF8/L60	M 5	60	8	10	10
PMFP/M5/AF8/L70	M 5	70	8	10	10
PMFP/M5/AF8/L80	M 5	80	8	10	10
SPACER FOR M6					
PMFP/M6/AF10/L10	M 6	10	10	8	10
PMFP/M6/AF10/L12	M 6	12	10	8	10
PMFP/M6/AF10/L15	M 6	15	10	10	10
PMFP/M6/AF10/L18	M 6	18	10	10	10
PMFP/M6/AF10/L20	M 6	20	10	10	10
PMFP/M6/AF10/L25	M 6	25	10	10	10
PMFP/M6/AF10/L30	M 6	30	10	10	10
PMFP/M6/AF10/L35	M 6	35	10	10	10
PMFP/M6/AF10/L40	M 6	40	10	10	10
PMFP/M6/AF10/L45	M 6	45	10	10	10
PMFP/M6/AF10/L50	M 6	50	10	10	10
PMFP/M6/AF10/L55	M 6	55	10	10	10
PMFP/M6/AF10/L60	M 6	60	10	10	10
PMFP/M6/AF10/L70	M 6	70	10	10	10
PMFP/M6/AF10/L80	M 6	80	10	10	10
PMFP/M6/AF10/L100	M 6	100	10	10	10

- All Dimensions are in MM
- Material : Brass / Steel (Zinc Passivated) (Steel grade EN-1AL)

Steel / Brass Spacers

POWERMAT code	Dimension		
SPACER FOR M2	L	O.D	I.D
PCS/04/122/L3	3	4	2.2
PCS/04/122/L4	4	4	2.2
PCS/04/122/L5	5	4	2.2
PCS/04/122/L6	6	4	2.2
PCS/04/122/L7	7	4	2.2
PCS/04/122/L8	8	4	2.2
PCS/04/122/L9	9	4	2.2
PCS/04/122/L10	10	4	2.2
PCS/04/122/L11	11	4	2.2
PCS/04/122/L12	12	4	2.2
PCS/04/122/L13	13	4	2.2
PCS/04/122/L14	14	4	2.2
PCS/04/122/L15	15	4	2.2
PCS/04/122/L18	18	4	2.2
PCS/04/122/L20	20	4	2.2
PCS/04/122/L25	25	4	2.2
PCS/04/122/L30	30	4	2.2
SPACER FOR M2.5			
PCS/05/127/L3	3	5	2.7
PCS/05/127/L4	4	5	2.7
PCS/05/127/L5	5	5	2.7
PCS/05/127/L6	6	5	2.7
PCS/05/127/L7	7	5	2.7
PCS/05/127/L8	8	5	2.7
PCS/05/127/L9	9	5	2.7
PCS/05/127/L10	10	5	2.7
PCS/05/127/L11	11	5	2.7
PCS/05/127/L12	12	5	2.7
PCS/05/127/L13	13	5	2.7
PCS/05/127/L14	14	5	2.7
PCS/05/127/L15	15	5	2.7
PCS/05/127/L18	18	5	2.7
PCS/05/127/L20	20	5	2.7
PCS/05/127/L25	25	5	2.7
PCS/05/127/L30	30	5	2.7
SPACER FOR M3			
PCS/06/132/L3	3	6	3.2
PCS/06/132/L4	4	6	3.2
PCS/06/132/L5	5	6	3.2
PCS/06/132/L6	6	6	3.2
PCS/06/132/L7	7	6	3.2
PCS/06/132/L8	8	6	3.2
PCS/06/132/L9	9	6	3.2
PCS/06/132/L10	10	6	3.2
PCS/06/132/L11	11	6	3.2
PCS/06/132/L12	12	6	3.2
PCS/06/132/L13	13	6	3.2
PCS/06/132/L14	14	6	3.2
PCS/06/132/L15	15	6	3.2
PCS/06/132/L18	18	6	3.2
PCS/06/132/L20	20	6	3.2
PCS/06/132/L25	25	6	3.2
PCS/06/132/L30	30	6	3.2

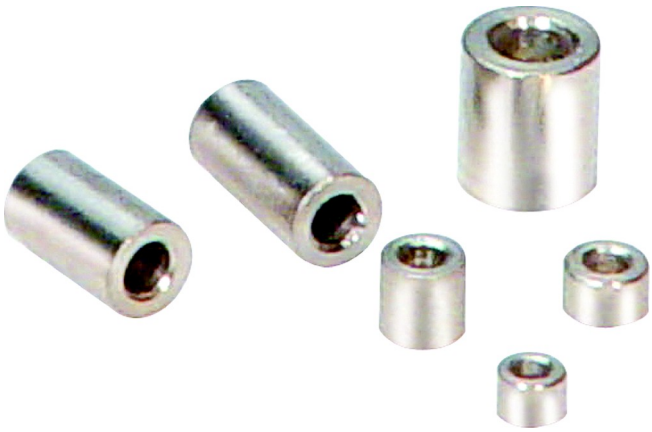

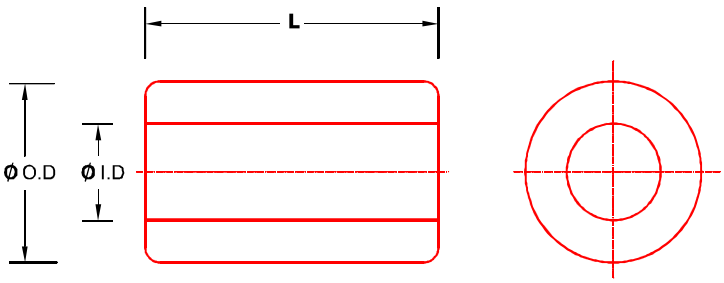

POWERMAT code	Dimension		
SPACER FOR M4	L	O.D	I.D
PCS/08/142/L3	3	8	4.2
PCS/08/142/L4	4	8	4.2
PCS/08/142/L5	5	8	4.2
PCS/08/142/L6	6	8	4.2
PCS/08/142/L7	7	8	4.2
PCS/08/142/L8	8	8	4.2
PCS/08/142/L9	9	8	4.2
PCS/08/142/L10	10	8	4.2
PCS/08/142/L11	11	8	4.2
PCS/08/142/L12	12	8	4.2
PCS/08/142/L13	13	8	4.2
PCS/08/142/L14	14	8	4.2
PCS/08/142/L15	15	8	4.2
PCS/08/142/L18	18	8	4.2
PCS/08/142/L20	20	8	4.2
PCS/08/142/L25	25	8	4.2
PCS/08/142/L30	30	8	4.2

- All Dimensions are in MM
- Material : Brass / Steel (Zinc Passivated) (Steel grade EN-1AL)

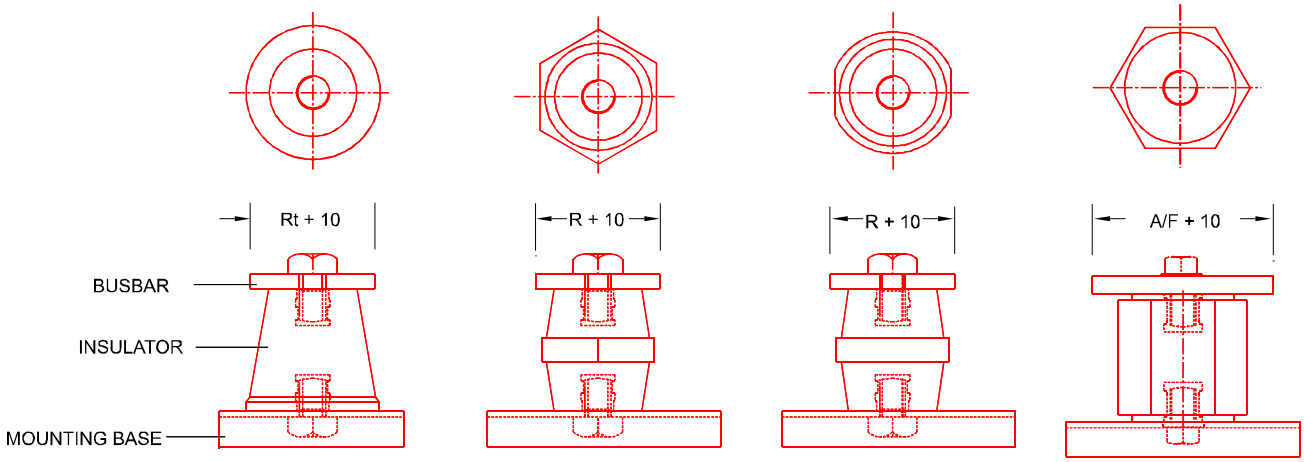

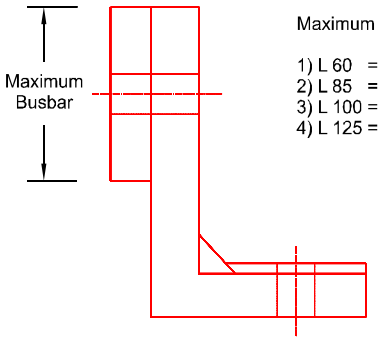

Maximum used Busbar Size

1) L 60 = 25 mm
2) L 85 = 50 mm
3) L 100 = 60 mm
4) L 125 = 75 mm

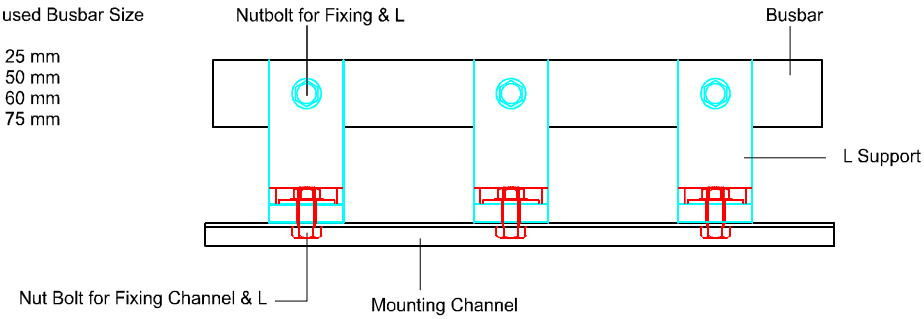

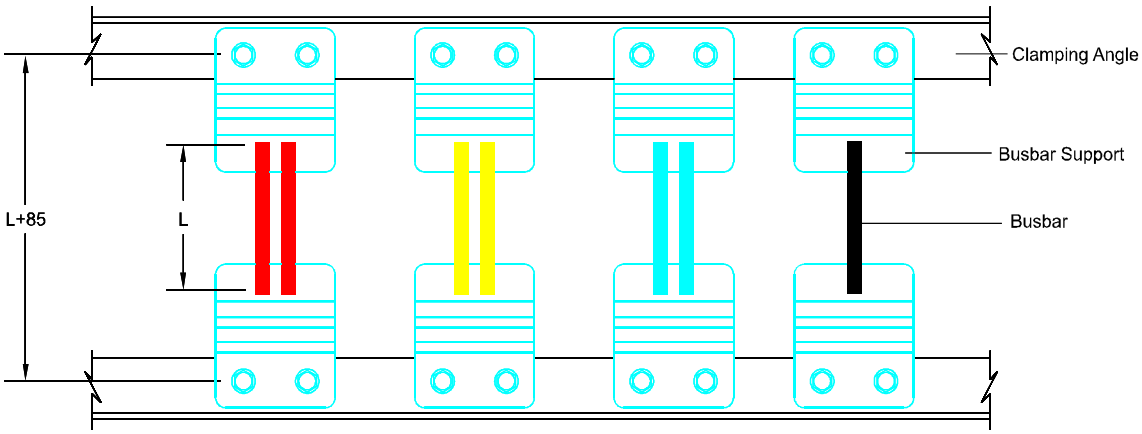

Series : S, W, K & T

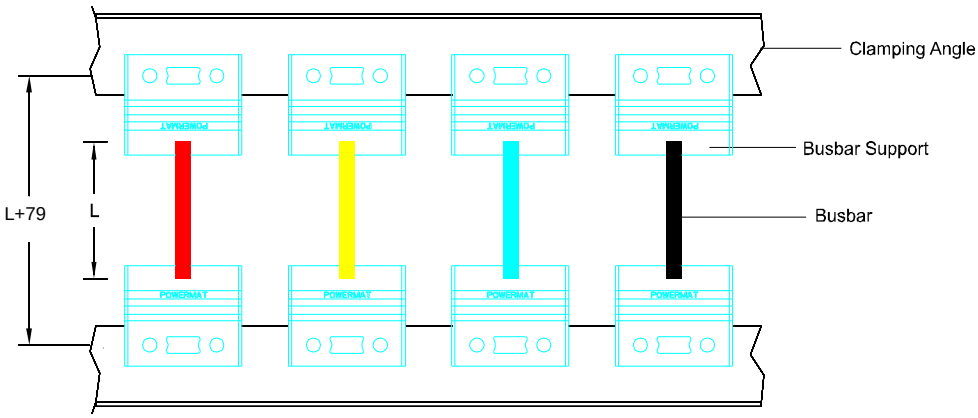

Mounting Details of Polyamide Finger Type Support (N-Series)

Mounting Detail

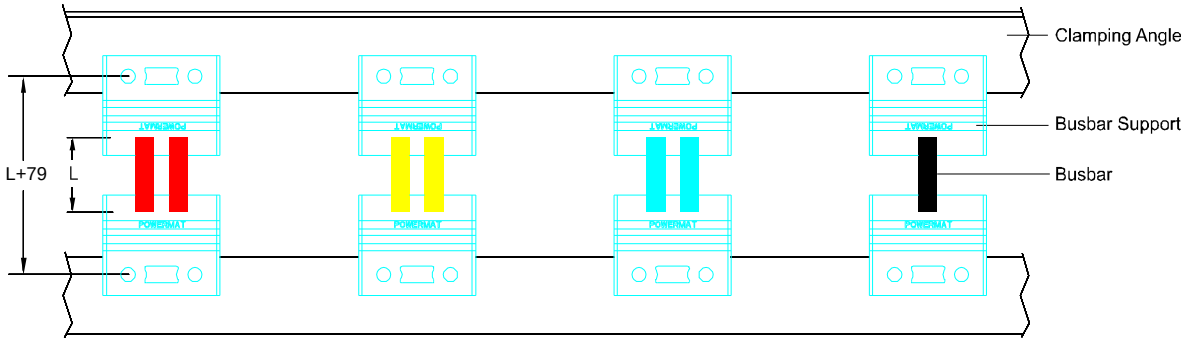

Mounting Details of Polyamide Finger Type Support (N-Series)

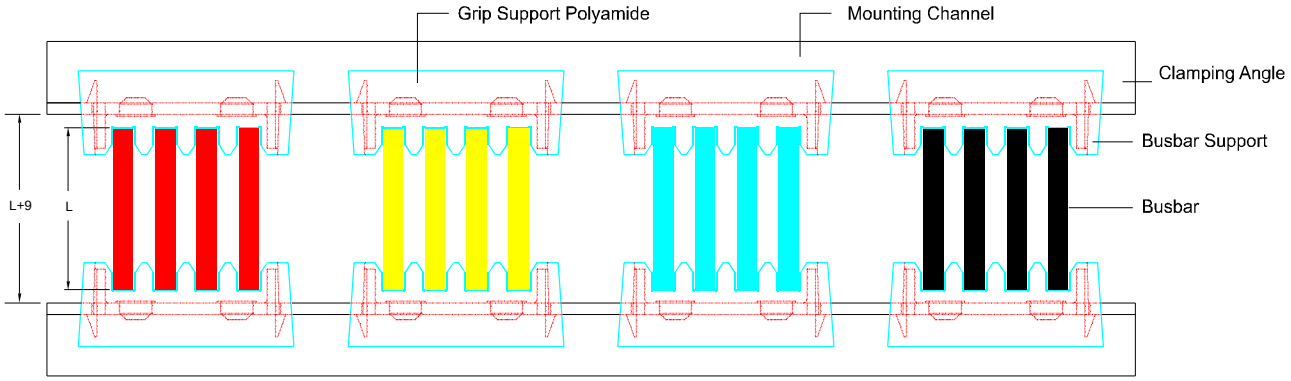

Mounting detail of PAGP 407

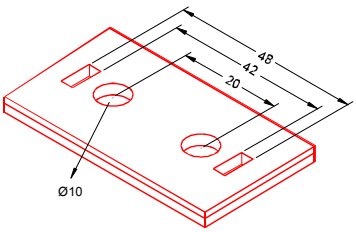

Mounting Fixture for
PAGP Series 110, 112, 206, 210, 307

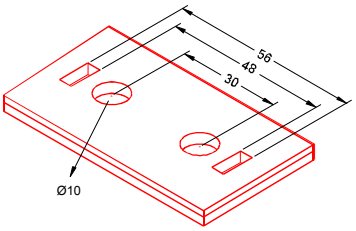

Mounting Fixture for PAGP-407

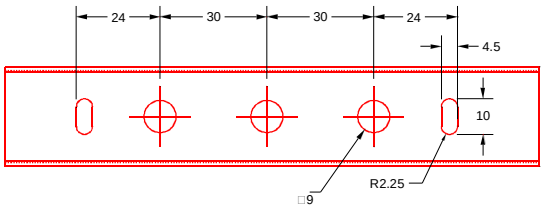

Mounting Fixture for 118 PAGP-510

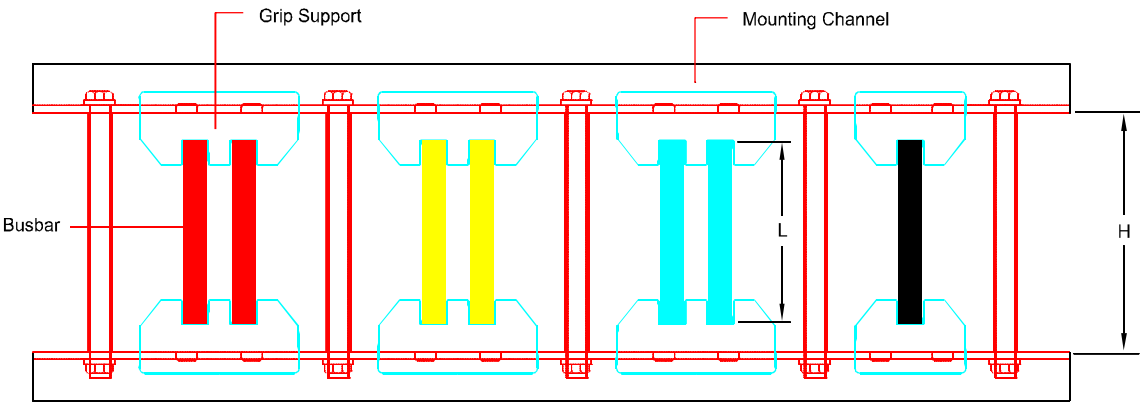

H for GP Series L+15
H for GPS Series L+10

POWERMAT

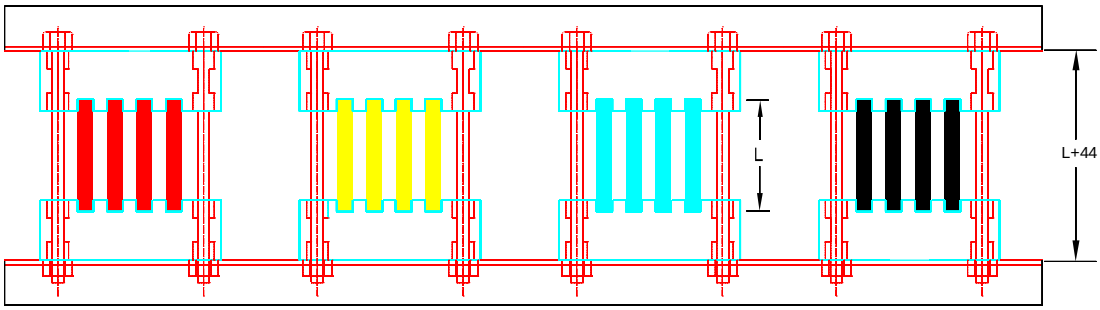

Mounting Details of N 22P 411/000

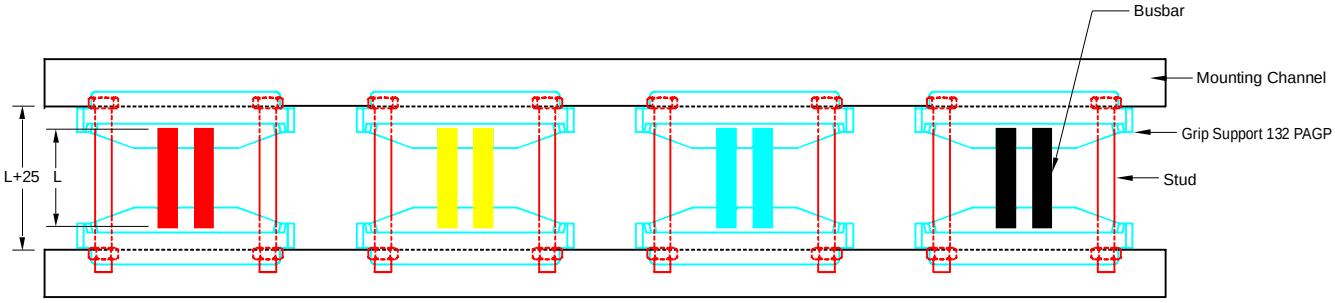

Mounting Details of 132 PAGP Series

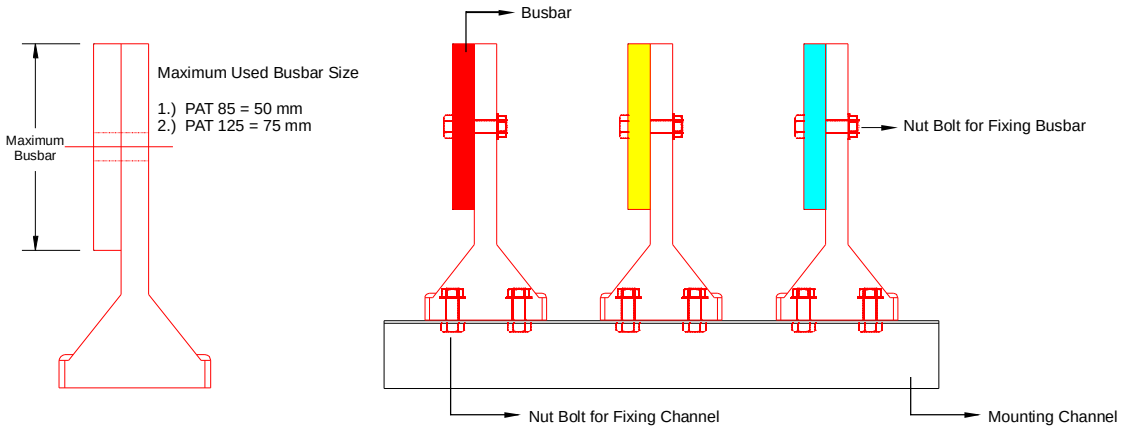

Mounting Details of PAT Series

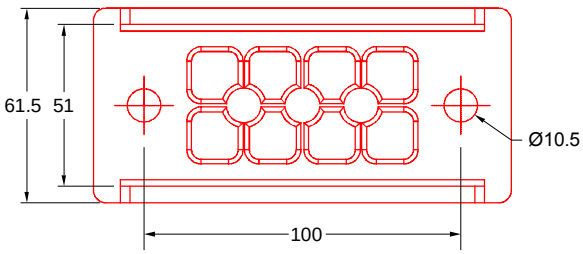

Bottom Details of 132 PAGP Series

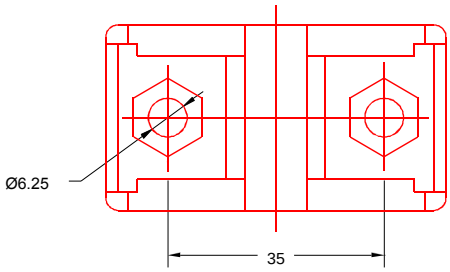

Top Details of PAT Series

Mounting Detail

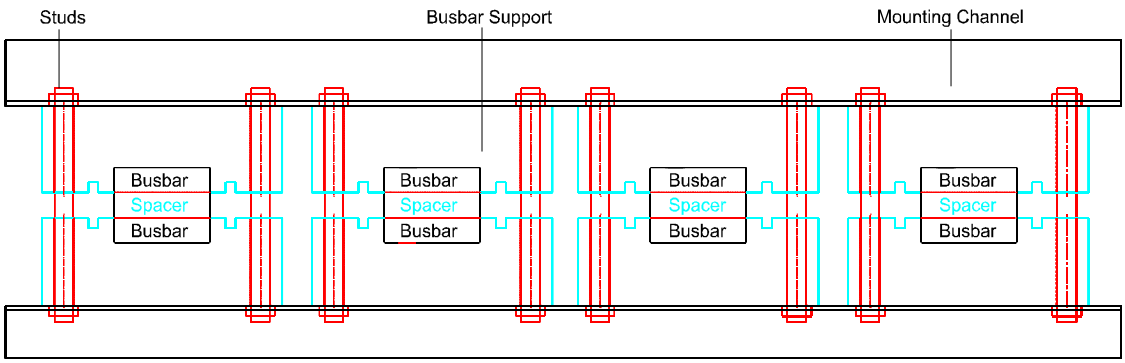

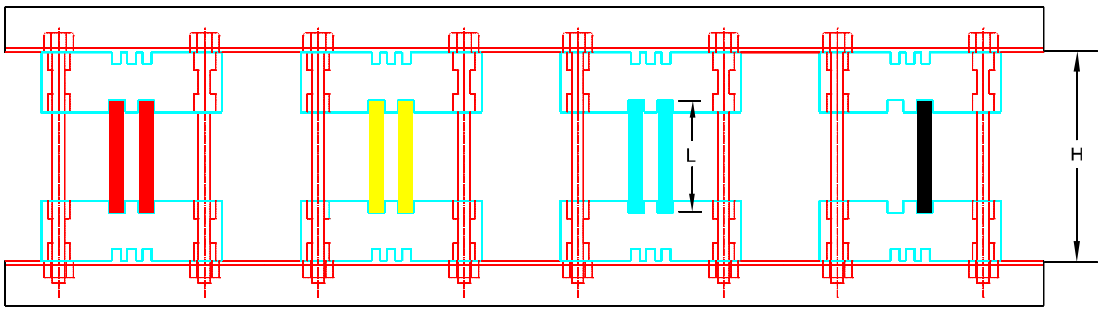

H = L + 64mm (for 10p, 11p, 12p, 14p Series)
H = L + 44mm (for 20p, 21p, 22p, 24p Series)

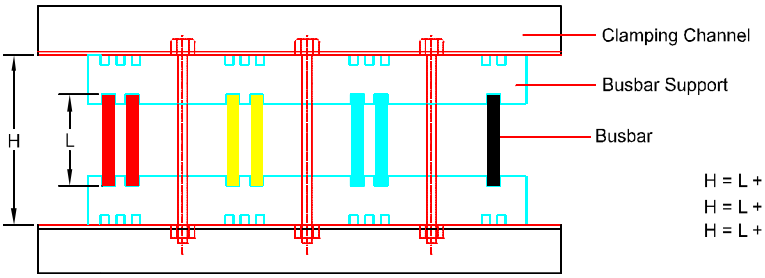

H = L + 64mm (for 30p, 31p, 32p, 42p, 43p, 65p Series)
H = L + 93mm (for 45p Series)
H = L + 54mm (for 60p, 61p, 62p Series)

L = Bus Bar Length

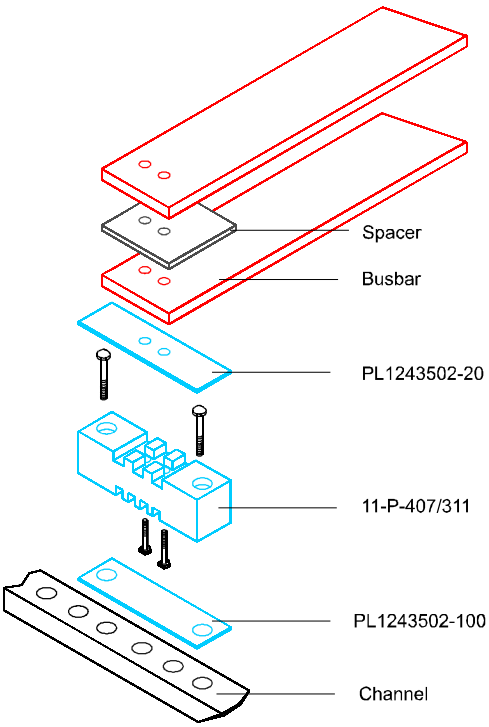

Torque chart - recommended values - indicative only

Metric Bolt Size	Torque N-m
M 4	2.3 - 2.9
M 5	4.5 - 6.0
M 6	7.7 - 10
M 8	19 - 25
M 10	37 - 49
M 12	65 - 86
M 16	155 - 210
M 20	305 - 410
M 22	415 - 550

* Range for Bolt used Grade 6.8 - 8.8

Insert Material & Grade

Material	Grade
Mild Steel (MS)	EN1AL
Aluminium Alloy (Al)	6061 - T6
Brass (B)	BS EN12164 CW 614N
Stainless Steel (SS)	303L

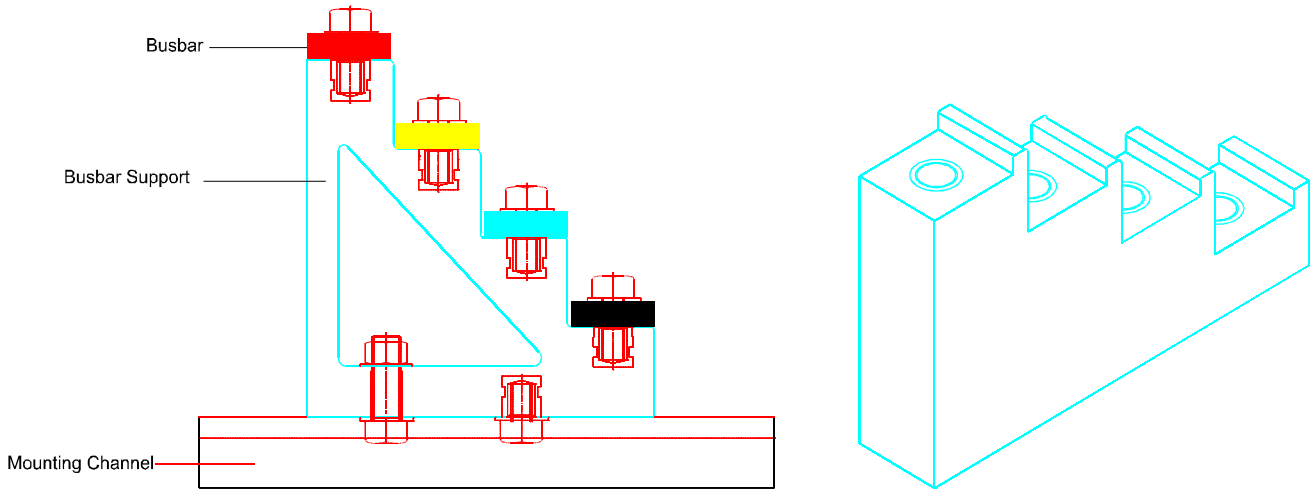

30, 40, 50 Series

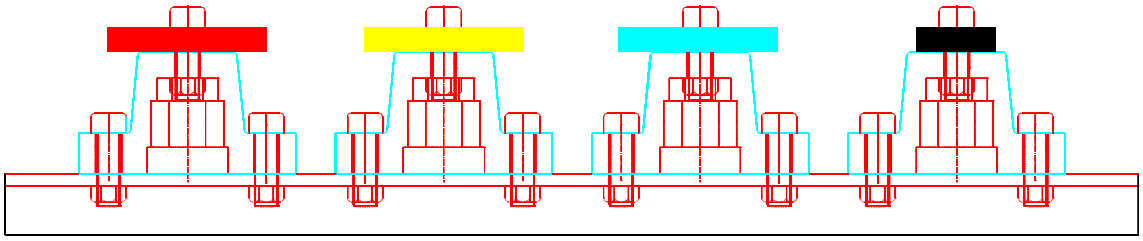

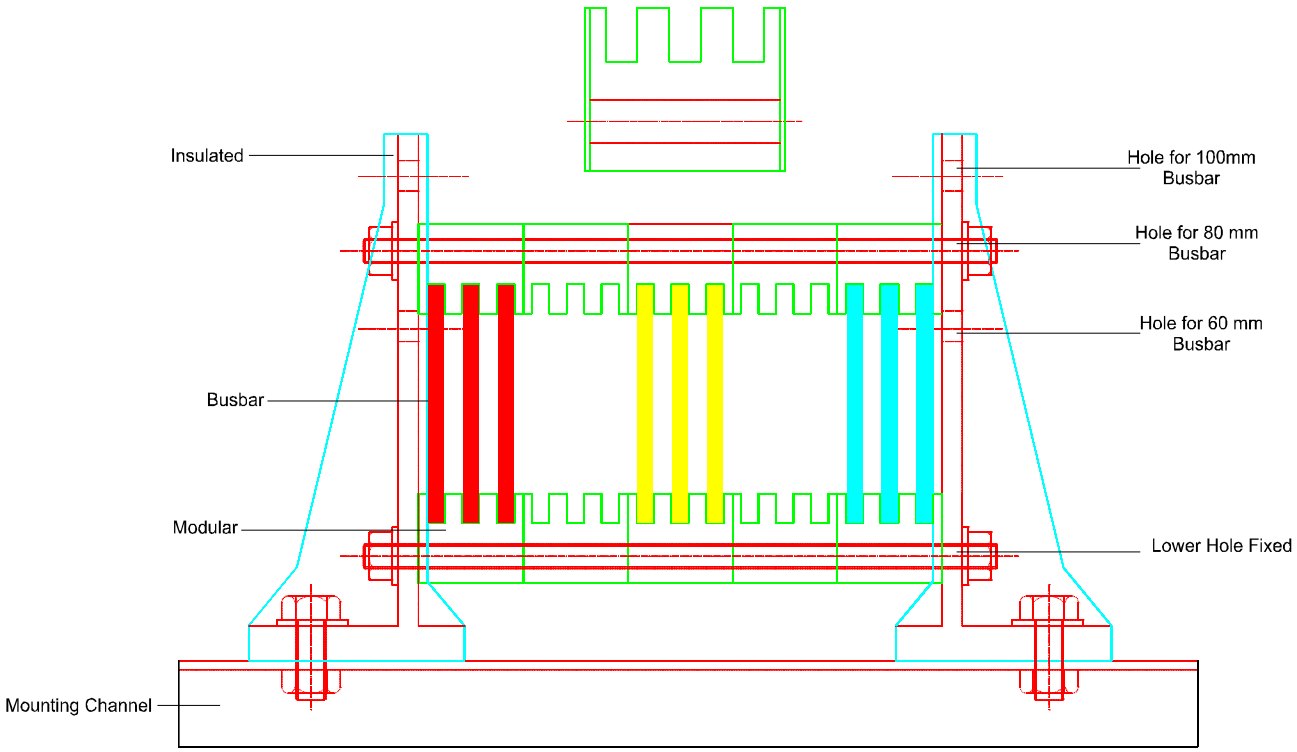

Quality

POWERMAT Commitment to being a full-service manufacturing company

- Fully trained Work Force in Quality Control Program.
- Total Quality Management program of continuous improvement.
- Just-In-Time delivery.
- CAD/CAM engineering services.
- Keep bringing new & Innovative manifestations of perfect engineering for the end use.
- Tooling facilities for the fastest response.
- State of the art computerised testing machines for testing raw materials and finished components.
- Consultancy for using of Bus Bar Supports in Power Control Centres & Bus Ducts under fault level conditions.
- Customer service with a mind of urgency.

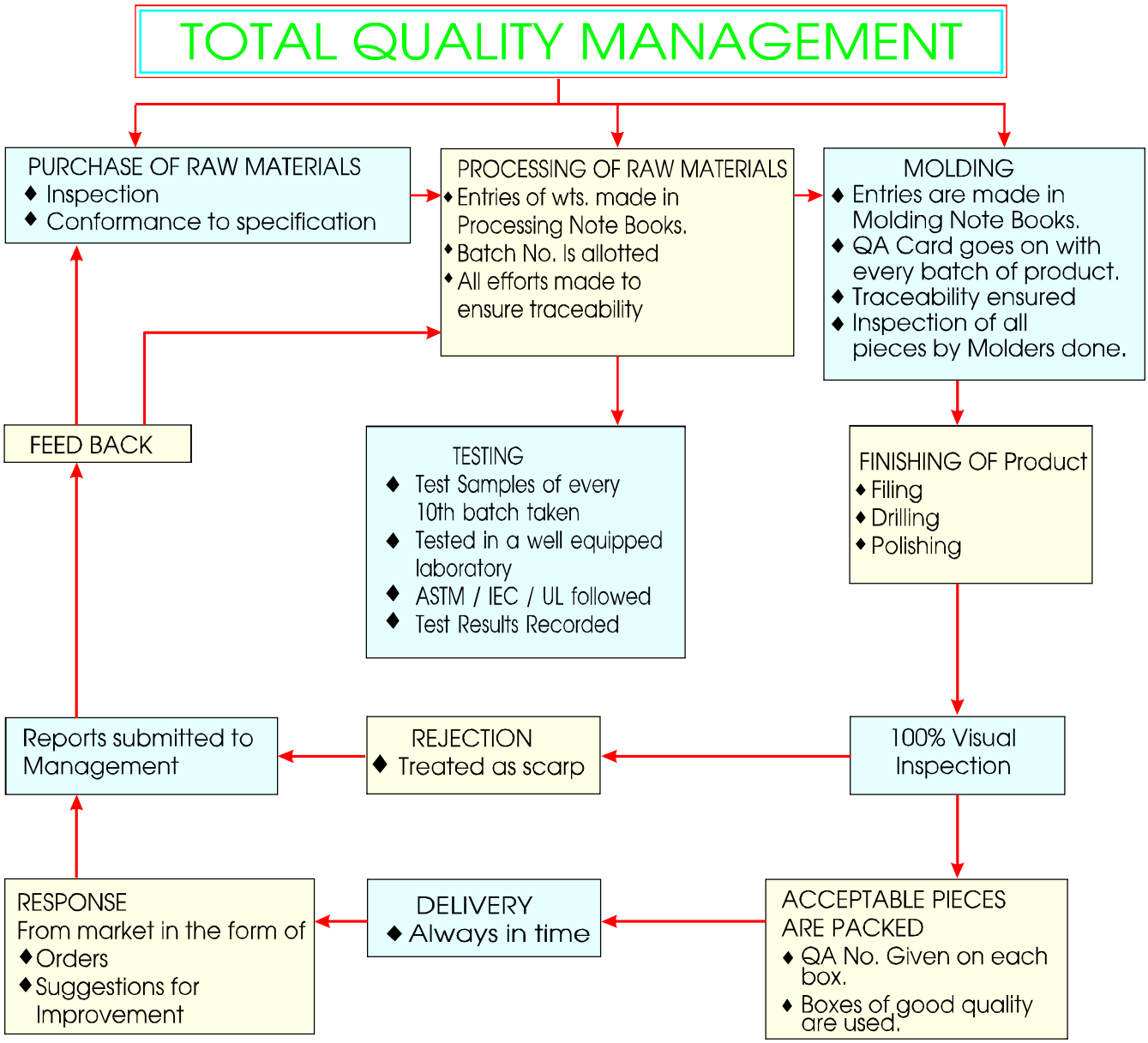

NO FULL STOP AT **POWERMAT**

POWERMAT

GLOBAL COMMITMENT

POWERCAM ELECTRICALS PVT. LTD.

Corporate Office :
F-9, Shopping Centre-I, Mansarovar Garden,
New Delhi - 110015 (INDIA)
Works :
11, M.I.E., Bahadurgarh - 124507, Haryana (INDIA)

Phone : +91-11-25462125 / 25116836, 25175575
Fax : +91-11-25166306
E-mail : powermat@powermatindia.com
Web. : www.powermatindia.com

DISTRIBUTOR :

© Copyright 2015
Powercam Electricals Pvt. Ltd., New Delhi (INDIA)